THE E86 FAMILY

AMD's x86 Embedded Solutions

AMD

AMD's E86 family

of x86 compatible devices

provides the best

price/performance value

from the world's

dominant microprocessor

architecture.

- *Industry standard x86 architecture which provides largest knowledge base of installed designers*
- *Assured, flexible, and x86 compatible migration path from 16-bit to full 32-bit bus design*
- *Enhanced performance and lower system costs*
- *High level of integration that reduces time-to-market and increases reliability*
- *A complete third-party support program from AMD's FusionE86℠ partners*

THE VALUE OF THE WORLD'S DOMINANT ARCHITECTURE.

AMD's E86™ family of x86 compatible devices provides the best price/performance value fr the world's dominant microprocessor architecture. From 16-bit microcontrollers to 32- microprocessors, general purpose processors to "PCs on a chip", the E86 family provides cle and simple upgrade paths that eliminate the need to redesign hardware or rewrite code.

AMD's E86 family processors offer embedded designers performance that rivals or surpass comparable RISC solutions. Better yet, x86 compatible E86 family processors deliver high p formance at a lower system-level cost than RISC-based solutions. Embedded x86 design using E86 family processors or controllers can also take advantage of an established t chain — with industry-standard tools from leaders like Microsoft and Borland. And since ea device with the E86 family uses the x86 instruction set, all are code compatible.

In recent years, the x86 microprocessor has gained momentum in the communications wor migrating rapidly from the desktop to embedded systems in public and private infrastructu and to every conceivable type of terminal device — from network computers to palmt devices to digital cellular systems. Many of these designs feature high performance AMD x cores along with AMD linecard ICs and AMD Ethernet solutions. AMD's next generation x platforms will integrate communications-specific peripherals to create superior integrat solutions for telecommunications and networking applications.

So whether you are designing for telecommunications, networking, mobile computing, m storage or industrial control applications, AMD's E86 family delivers the features, performan reliability and fast time-to-market required to support generations of embedded designs.

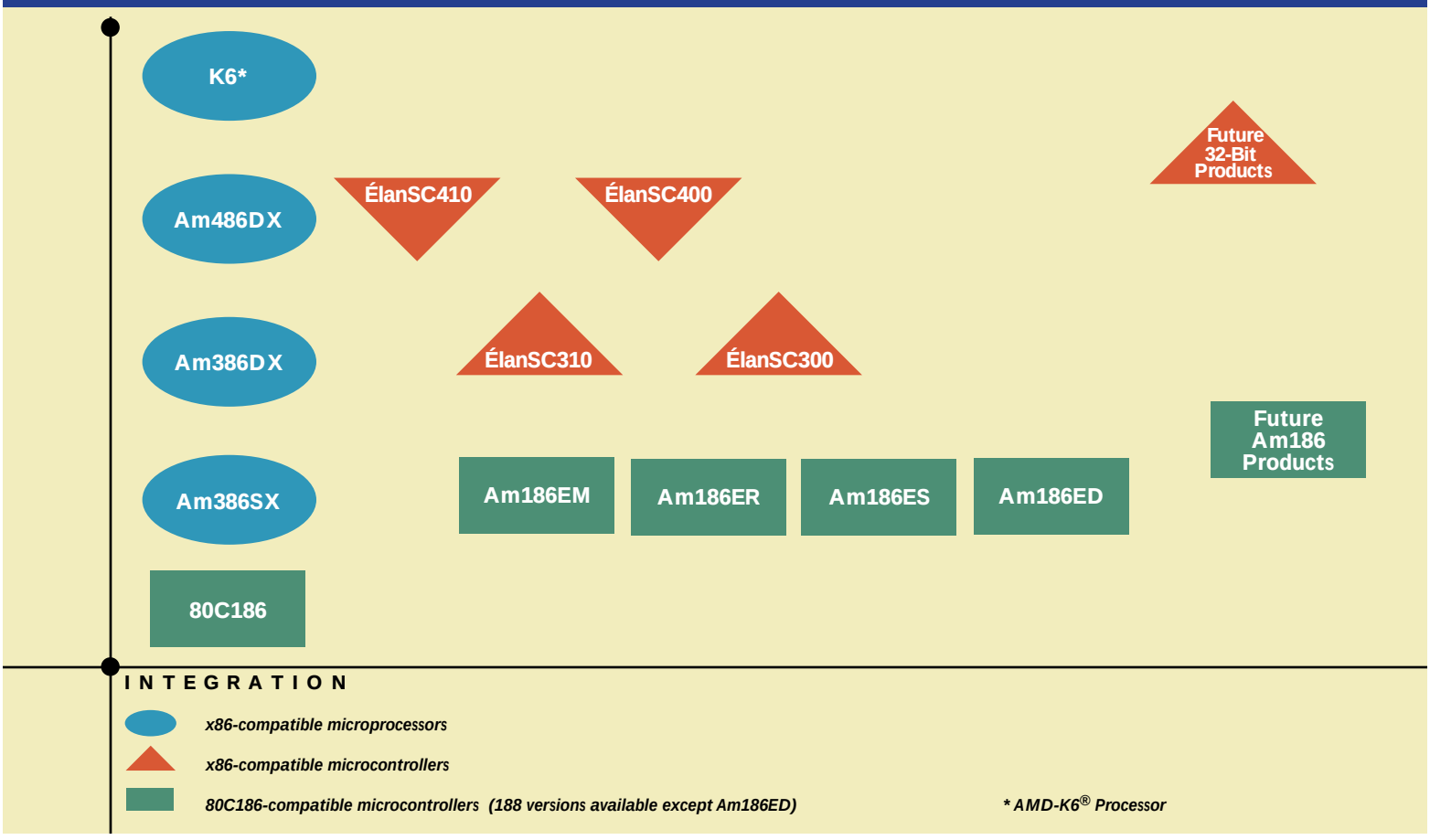

AMD's E86 16-Bit Microcontroller Family

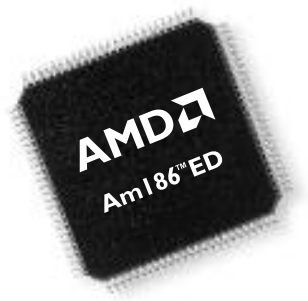

LOWER SYSTEM COSTS... FASTER TIME-TO-MARKET.

AMD's 16-bit microcontroller family offers a unique variety of x86 solutions with an unmatched range of performance and integration.

With AMD's 80C186 devices your design benefits from both low power and the advantage of smaller package dimensions. These devices have a reputation in the industry for flexibility and ease of programming, and offer much higher performance than 8-bit processors.

AMD's E86 family of 16-bit integrated microcontrollers offer enhanced system functionality and on-chip integration that add up to lower system costs, faster time-to-market, and performance in the 32-bit range. These are the fastest 80C186's on the market — all feature an on-chip PLL and nonmultiplexed address/data bus which frees the processor to run at nearly twice the speed of standard 80C186 controllers — without an increase in external memory speed requirements. Plus they support a zero-wait-state operation at 40 MHz with 70-ns memory for higher performance, achieving 386-class performance for a 80C186 system cost.

Each integrated microcontroller offers its own unique feature set (all include a glueless memory interface to SRAM and ROM) plus the integration of common system peripherals like a demultiplexed address bus, three timers, an interrupt controller, two DMA controllers, a watchdog timer, and 32 programmable 1/0 (PIO) pins — on one chip.

Product Highlights

AMD 8OC186 AND 8OC188 MICROCONTROLLERS

- > *Two-channel DMA*
- > *Three 16-bit counters/timers*
- > *Interrupt controller: five internal and five external interrupts*
- > *13 programmable chip selects*
- > *DRAM refresh control with Power Save mode*
- > *68-pin PLCC, 80-pin PQFP and TQFP*

80C186 MICROCONTROLLER
20 MHz 2.67 VAX MIPS System

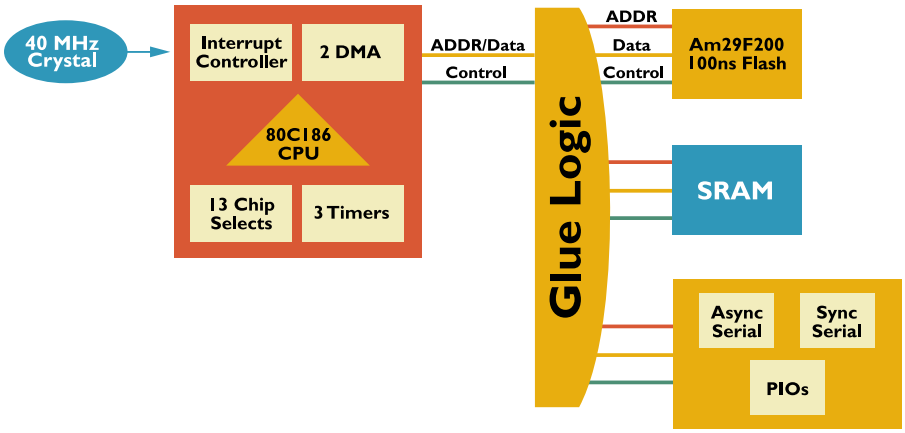

Am186EM AND Am188EM MICROCONTROLLERS

Higher Performance, Improved Integration

- > *80C186 core, familiar 80C186 peripherals*
- > *Integrated system peripherals for lower cost*
- > *One async, one sync serial port*
- > *6 external interrupts, 7 internal interrupts*
- > *Nonmultiplexed address bus for improved memory access*
  - > *lx or ½x CPU clock*
  - > *12 programmable chip selects*
- > *100-pin PQFP and TQFP*

Am186EM MICROCONTROLLER
Simplified 40 MHz 5.35 VAX MIPS System

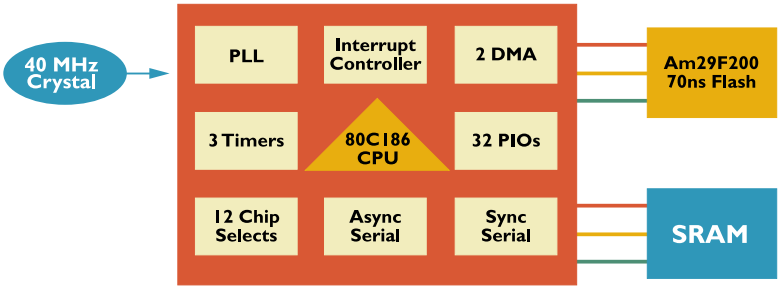

Aml86ER AND Aml88ER MICROCONTROLLERS

Higher Performance, RAM Integration

- *80C186 core, familiar 80C186 peripherals*
- *Integrated system peripherals for lower cost, plus:*
  - *32 Kbytes RAM*
- *One async, one sync serial port*
- *6 external interrupts, 7 internal interrupts*
- *Nonmultiplexed address bus for improved memory access*
  - *lx, 4x, or ½x CPU clock*
  - *13 programmable chip selects*
- *100-pin PQFP and TQFP*

Am186ER MICROCONTROLLER
Simplified 40 MHz 5.35 VAX MIPS System

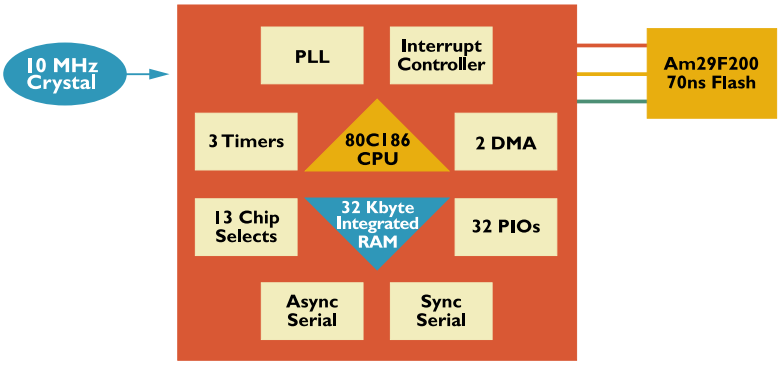

Aml86ES AND Aml88ES MICROCONTROLLERS

Higher Performance, Increased Functionality

- *80C186 core, familiar 80C186 peripherals*
- *Integrated system peripherals for lower cost, plus:*
  - *Two full-featured async serial ports allow full-duplex, 7- or 8-bit data transfers with hardware flow control and DMA capability*
  - *Pulse width demodulation*
  - *Data strobe, true async bus interface option included for DEN*
- *8 external interrupts, 8 internal interrupts*
- *Nonmultiplexed address bus and programmable bus sizing for improved memory access*
  - *lx or ½x CPU clock*
  - *12 programmable chip selects*
- *100-pin PQFP and TQFP*

Am186ES MICROCONTROLLER
Simplified 40 MHz 5.35 VAX MIPS System

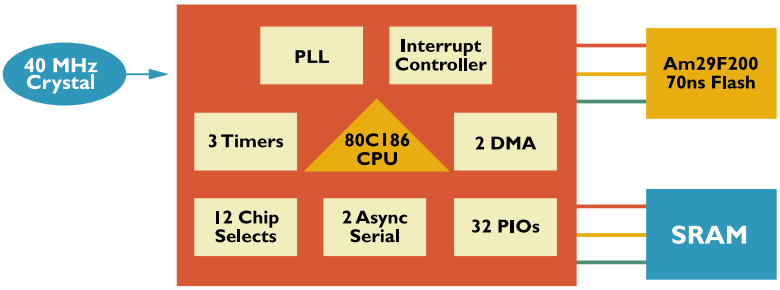

Aml86ED MICROCONTROLLER

Higher Performance, Even More Functionality

- *80C186 core, familiar 80C186 peripherals*
- *Integrated system peripherals for lower cost, plus:*
  - *4-bit DRAM controller for lower system memory cost*
  - *Two full-featured async serial ports allow full-duplex, 7-, 8- or 9-bit data transfers with hardware flow control and DMA capability*
  - *Pulse width demodulation*
  - *Data strobe, true async bus interface option included for DEN*
- *8 external interrupts, 8 internal interrupts*
- *Nonmultiplexed address bus and programmable bus sizing for improved memory access*
  - *lx or ½x CPU clock*
  - *12 programmable chip selects*
- *100-pin POFP and TOFP*

Am186ED MICROCONTROLLER
Simplified 40 MHz 5.3 VAX MIPS System

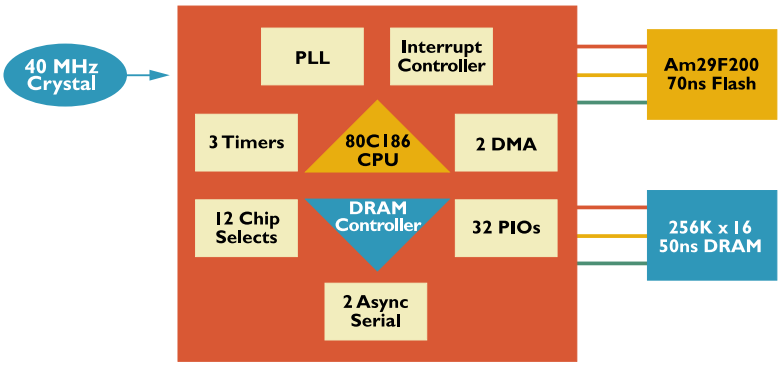

EMBEDDED DESIGNS... PROVEN PERFORMANCE.

Embedded designers need an ever increasing level of processing power to keep up with the demanding requirements of today's embedded systems. AMD's E86 32-bit microprocessor family delivers proven performance, competitive price, compatible software/hardware migration paths, and long-term product supply.

x86 COMPATIBILITY.

The Am386SX, Am386DX, and Am486DX* series contains the same core architecture developed for the personal computer industry, providing the advantages of x86 compatibility and an extensive infrastructure of tools and development support. Embedded designers using a E86 32-bit microprocessor will have access to a host of low-cost software and hardware development tools. Any x86 based PC can serve as a native development platform.

* Am386SX, Am386DX, and Am486DX processors replace Am386SE, Am386DE, and Am486DE processors.

Product Highlights

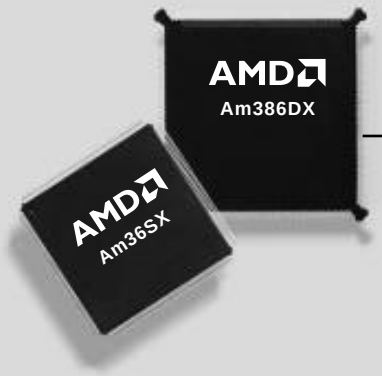

Am386SX and Am386DX MICROPROCESSORS

- > *Am386 microprocessor core — optimized for high performance, low cost embedded designs*
- > *Increased address range for upgrades: 16-Mbyte address range (Am386SX microprocessor), 4-Gbyte address range (Am386DX microprocessor)*
- > *3.3-V or 5-V operation*
- > *100-pin PQFP (Am386SX), 132-pin PQFP and 132-pin PGA (Am386DX)*

Am486DX MICROPROCESSORS

- > *Am5x86 microprocessor core — Full-up DOS/Windows™-compatible 486 with Floating Point Unit*
- > *2x, 3x, or 4x clock multiples (66, 100 and 133 MHz)*
- > *16 Kbyte write-back, write-through cache*
- > *Complete 32-bit architecture: 32-bit internal/32-bit external bus width, 4-Gbyt address range*
- > *IEEE 1149.1 JTAG boundary-scan compatibility*
- > *3-V core with 5-V tolerant I/O*
- > *208-pin SQFP and 168-pin PGA*

Am486DX2-66V16Bxx ***This product is a full "DX" enhanced product, identical to AMD's Am5x86 (X5) product, running at 66/33 MHz.***

Am486DX4-100V16Bxx ***This product is a full "DX" enhanced product, identical to AMD's Am5x86 (X5) product, running at 100/33 MHz.***

Am486DX5-133W16Bxx ***This product is a full "DX" enhanced product identical to AMD's Am5x86 (X5) product, running at 133/33 MHz.***

AMD's Élan Family of 32-Bit Microcontrollers

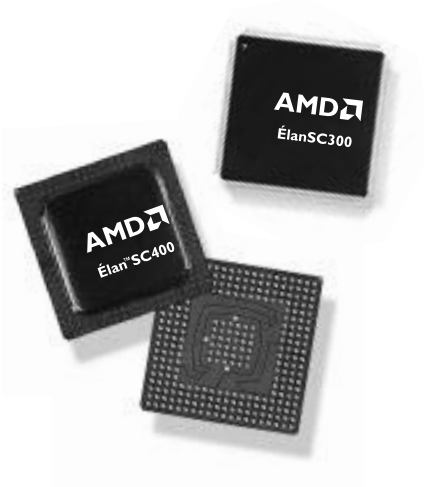

EMBEDDED SOLUTIONS... THE NEW GENERATION.

The Élan family of microcontrollers is the basis for a new generation of 100% PC/AT compatible embedded solutions. The Élan family offers designers a variety of product and performance options with a product selection ranging from the low-cost ÉlanSC310 controller to the high performance ÉlanSC400 controller. All Élan family devices are fully static and feature built-in power management.

The Élan family addresses the needs of the mobile and embedded computing market by combining proven CPU cores with a complete PC/AT chipset and mobile computing peripheral logic. No other single-chip solution offers designers this level of integration, performance, and reliability.

Product Highlights

ÉlanSC300 and ÉlanSC310 MICROCONTROLLERS

- > *Combines Am386 CPU with PC/AT chipset and essential embedded PC peripherals*
- > *Mobile computing peripherals include: power management unit, PLL clock generators, dual PCMCIA card support*, and an LCD graphics controller**
- > *Memory controller, DMA and interrupt controllers, real time clock, and one serial and parallel port*
- > *Glueless support for SRAM, DRAM, ROM and Flash (up to 16-Mbyte)*
- > *16-bit ISA bus or local bus peripheral interfaces*
- > *208-pin PQFP, single-chip solution*

ÉLANSC300/ÉLANSC310 MICROCONTROLLER
33 MHz 5.6 VAX MIPS System

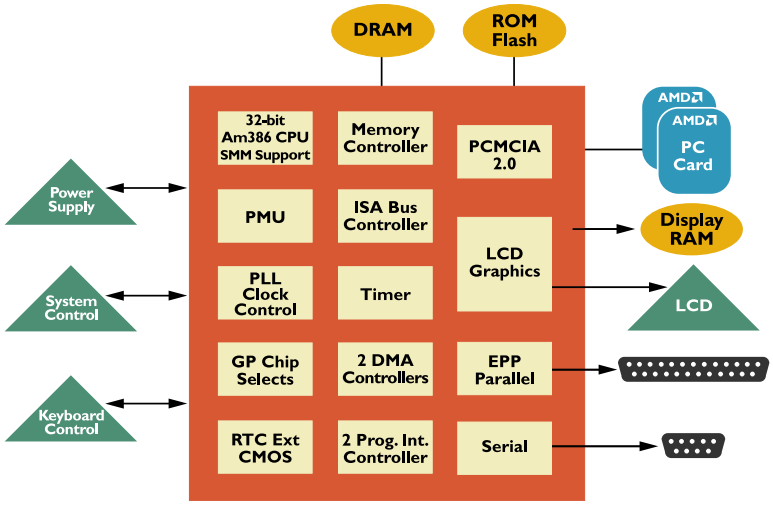

ÉlanSC400 and ÉlanSC410 MICROCONTROLLERS

- > *Combines Am486 CPU with PC/AT chipset and essential embedded PC peripherals*
- > *33-, 66-, and 100-MHz clock speeds with 8 Kbyte cache*
- > *Mobile computing peripherals include: advanced power management unit, PLL clock generators, dual PCMCIA card support*, LCD graphics controller*, IrDA infrared port, and a matrix scan keyboard controller*
- > *Complete memory controller, DMA and interrupt controllers, real time clock, and one serial and parallel port*
- > *16-bit ISA-type bus controller*
- > *32-bit CPU local bus access (VL-type)*
- > *292-pin BGA, single-chip solution*

ÉLANSC400/ÉLANSC410 MICROCONTROLLER
100 MHz 81.6 VAX MIPS System

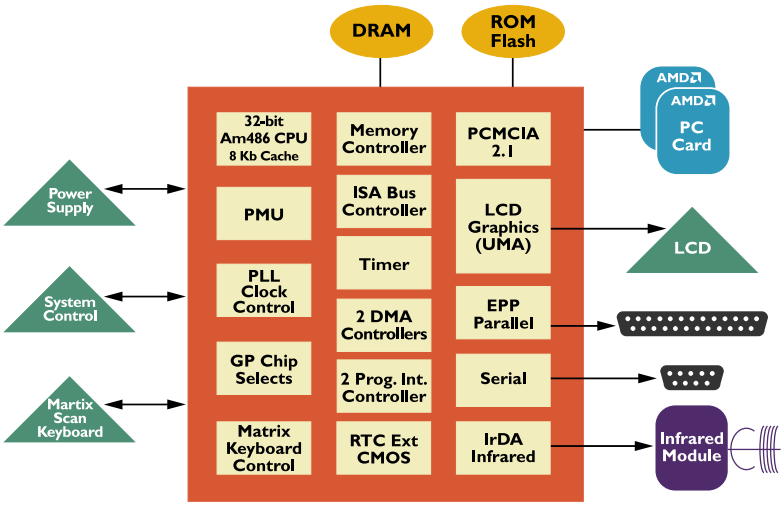

DEMONSTRATION, EVALUATION, AND REFERENCE DESIGN KITS.

E86 family evaluation and development kits provide platforms for code development, architectural evaluation and benchmarking. Each E86 family demonstration, evaluation, and reference design kit is shipped with an E86 Family Products and Development Tools CD-ROM*. This orientation provides a complete E86 family overview with a categorical reference to tool support. Vendor contacts, product information, demonstration software, and application notes are also included on the CD. Demonstration, evaluation, and reference design kits are available today to speed the time-to-market of your E86 product design.

E86 Family 16-Bit Microcontroller BOARD Kits

Product Highlights

SD186EM/SD186ES Demonstration Boards

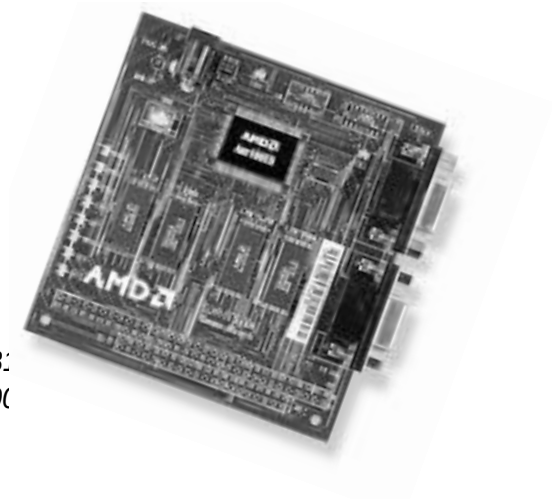

- *Am186EM 40-MHz controller or Am186ES 40-MHz controller*
- *Local bus connector to facilitate system prototyping*
- *RS-232 serial port equipped with DB-9 connector:*
  - *SD186EM/SD188EM: one*
  - *SD186ES/SD188ES: two*
- *Glueless interface to SRAM and Am29F010 Flash:*
  - *SD186EM/SD186ES: two Flash (256 Kb), two SRAM (256 Kb)*
  - *SD188EM/SD188ES: one Flash (128 Kb), one SRAM (128 Kb)*
- *Am186EM board kit ordering information: Am186KT/EM1B1004, Am188KT/EM1B1*
- *Am186ES board kit ordering information: Am186KT/ES1B1004, Am188KT/ES1B10(*

Net186™ Embedded Ethernet Evaluation Board

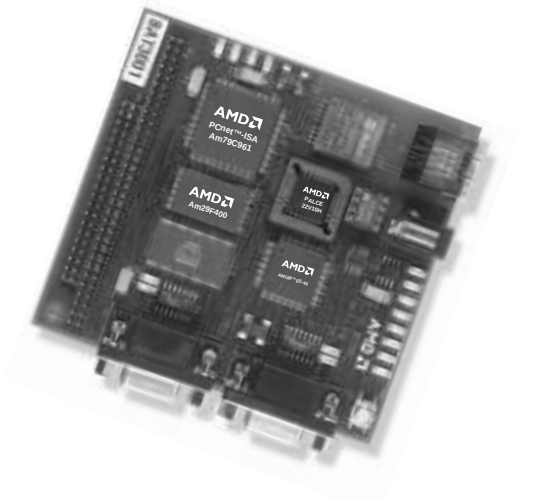

- *Am186ES 40-MHz controller*
- *Am79C961 PCnet™-ISA II Ethernet controller*
  - *Single-chip Ethernet controller for direct business interface to ISA and EISA buses*
  - *Supports IEEE 802.3/ANSI 8802-3 Ethernet standards*
- *Communication ports:*
  - *Two RS-232 serial ports driven by the Am186ES via two DB-9 DCE connectors*
  - *One 10base-T Ethernet port driven by the PCnet-ISA II via an RJ-45 connector*
- *Net186 drivers compatible with US Software's TCP/IP stack*
- *Local bus connector to facilitate system prototyping*
- *Glueless interface to SRAM and Am29F010 Flash (two Flash (256 Kb), two SRAM (*
- *Net186 board kit ordering information: NET186-EVAL-KIT*

** To order your free E86 Family Products and Development Tools CD-ROM, call 1-800-222-9323 and request Order # 21058.*

SD186ER Demonstration Board

- > *Am186ER 40-MHz controller*
- > *RS-232 serial port equipped with DB-9 DCE connector*
- > *Local bus connector to facilitate system prototyping*
- > *Glueless interface to memory: 32 Kb of RAM integrated in Am186ER for board's read/write storage, one Am29F200 (256 Kb) flash device*
- > *Am186ER board kit ordering information: Am186KT/ER1B1004, Am188KT/ER1B1004*

SD186ED Demonstration Board

- > *Am186ED 40-MHz controller*
- > *Two RS-232 serial ports equipped with DB-9 DCE connectors*
- > *Local bus connector to facilitate system prototyping*
- > *Glueless interface to SRAM, FLASH, and DRAM: one Am29F400 (512 Kb) flash device, one DRAM (512 Kb) device*
- > *Am186ED board kit ordering information: Am186KT/ED1B1004*

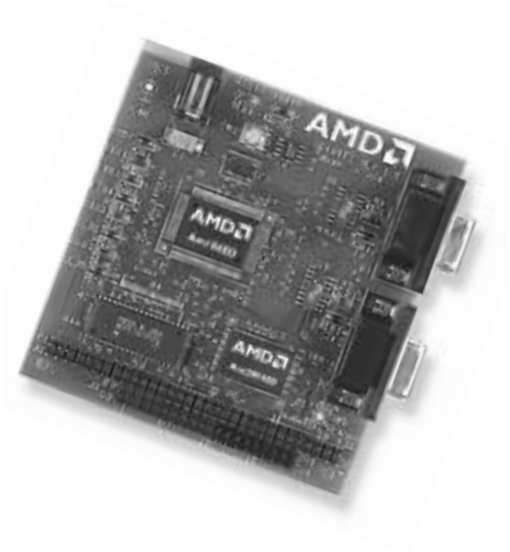

E86 Family 32-Bit Microcontroller BOARD Kits

Product Highlights

ÉlanSC300/ÉlanSC310 Evaluation Board

- > *ÉlanSC300 33-MHz controller or ÉlanSC310 33-MHz controller*
- > *PC/AT motherboard functionality: AT keyboard, PS/2 mouse, two 16-bit ISA slots, FDD, IDE HDD, two serial, one parallel port*
- > *Provides access to all 208 microcontroller signals*
- > *Compatible with all 32 bit x86 operating systems*
- > *Kit includes documentation, software tools and evaluation BIOS*
- > *Four PCMCIA connectors (2 buffered, 2 unbuffered)**
- > *20 pin LCD connector**
- > *ÉlanSC300 board kit ordering information: ÉlanSC300EVAL*
- > *ÉlanSC310 board kit ordering information: ÉlanSC310EVAL*

** ÉlanSC300 board only*

ÉlanSC310 Reference Design Board

- > *ÉlanSC310 33-MHz controller*
- > *AT keyboard, PS/2 mouse, three serial, two parallel, one floppy and one IDE port*
- > *72-pin SIMM socket (for up to 16 Mbytes DRAM), EPROM socket for BIOS extensions or XIP apps*
- > *Trident TVG-9470 VGA, 4 Mbyte TrueFSS Flash Array*
- > *Microsoft MS-DOS 6.22 (compact) and Windows 3.1 (compact and optional), APM support*
- > *ÉlanSC310 reference board kit ordering information: ÉlanSC310REF*

ÉlanSC400 Evaluation Board

- > *ÉlanSC400 66-MHz controller*
- > *AT keyboard, PS/2 mouse, two 16C550-compatible serial ports, IrDA interface, IDE hard-disk-drive interface, floppy disk controller*
- > *3.3-V, 70-ns EDO DRAM SIMMs*
- > *DOS and Windows compatible: BIOS and PC card support provided by Phoenix and SystemSoft*
- > *Integrated power management*
- > *ÉlanSC400 evaluation board kit ordering information: ÉlanSC400EVAL*

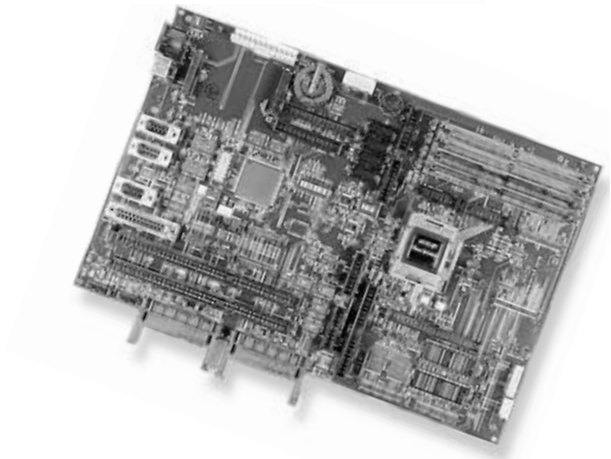

ÉlanSC400 µforCE Reference Design Platform

- > *µforCE demonstration system board*
  - > *ÉlanSC400 controller*
  - > *Tritech 10-bit digitizer controller for pen input*
  - > *Crystal audio chip for very high quality and WAV audio output*
  - > *Power supply logic based on Micrel power controller chips*
  - > *4 Mbyte ROM, 4 Mbyte DRAM*
  - > *Demo of Microsoft® Windows™ CE 2.0 operating system shell and sample applications including Internet Explorer and games*
- > *Additional system features*
  - > *64 key matrix scan keyboard*
  - > *480 x 320 ALPs LCD with resistive digitizer overlay*
  - > *NiMH battery pack*
  - > *A/C wall power converter cube (providing DC 12 V input to µforCE board)*
  - > *Kit includes documentation, theory of operation, schematics, data sheets, and bill of materials*
- > *µforCE system kit ordering information: ELANSC400UFORCE*

BRING YOUR DESIGN TO MARKET FASTER WITH SUPPORT FROM THE FUSIONE86 PROGRAM.

Extending design benefits to development is key to our customers' success. The AMD FusionE86 program provides all E86 family customers with development support to shorten time-to-market and ease design. With support ranging from software and hardware to PC chip-sets, the FusionE86 program is primed to assist E86 designs from prototype through final production.

AMD's E86 family

maintains compatibility

with the world's dominant

microprocessor

architecture—x86.

For more information
on AMD's E86 Family of x86
compatible devices, call
1-800-222-9323 or 1-408-732-2400.
Or visit our WWW site at
www.amd.com
www.amd-embedded.com

One AMD Place
P.O. Box 3453
Sunnyvale,
California 94088-3453
USA
(408) 732-2400
(800) 538-8450
TWX: 910-339-9280
TELEX: 34-6306

TECHNICAL SUPPORT
USA & CANADA non-PC CPU: (800) 222-9323
USA & CANADA PC CPU: (408) 749-3060
USA & CANADA PC CPU E-mail: hw.support@amd.com

EUROPE & UK: +44-(0)1276 803299
Fax: +44-(0)1276 803298
BBS: +44-(0)1276 803211
FRANCE: 0800 90 8621
GERMANY: 089-450-53199
ITALY: 1678-77224
EUROPE E-mail: euro.tech@amd.com

FAR EAST Fax: (852) 2956-0599
JAPAN: 03-3346-7550
Fax: 03-3346-7848

ARGENTINA: 001-800-200-1111,
after tone 800-859-4478
CHILE: 800-532-853
MEXICO: 95-800-222-9323

LITERATURE ORDERING
USA & CANADA: (800) 222-9323
EUROPE E-mail: euro.lit@amd.com
FAR EAST Fax: (852) 2956-0599
JAPAN Fax: 03-3346-9628

www.amd.com

RECYCLED &
RECYCLABLE

Printed in USA
LIT-15M-12/97-0
19181G

Am386, Am486 and AMD-K6 are registered trademarks, E86, Élan, Am186, Am188, AMD, the AMD logo, and combinations thereof are trademarks, and FusionE86 is a service mark of Advanced Micro Devices, Inc. All other brand and product names may be trademarks or registered trademarks of their respective companies.