Application Note
April 2002

System 10000 TVRO Fiber-Optic Links Preinstallation Guide

Introduction

The System 10000 TVRO L-band and C-band fiber-optic links provide a simple and extremely reliable connection between a receive-only earth station antenna site and the associated satellite receivers at a remote location using standard single-mode optical fiber. They are primarily used in cable television headends and broadcast television facilities. Standard versions allow for cable lengths of up to 15 km, while the high-performance models can be used at up to 40 km distance.

For each low-noise amplifier (LNA) or LNB output, the entire polarization is converted to an optical signal by direct modulation of a semiconductor laser diode, and is then converted back to an RF signal by a PIN photodiode at the other end of the fiber. The link is format-independent due to its inherently low phase noise, so it may be used with either FM or QPSK modulated signals. Fiber-optic cable is compact, flexible, lightweight, and provides electrical isolation and immunity from electromagnetic interference.

The System 10000 product family includes a complete selection of fiber-optic transmitters, receivers, input and output gain controls, and ac power supplies in 3U high, rack-mount plug-ins. Both L-band and C-band versions are available and can be used in a unique L-/C-band configuration that carries two polarizations on one fiber. Input gain controls offset conversion and optical losses to ensure adequate signal at the satellite receiver. Each 19 in. wide rack chassis has the capacity for up to four polarizations plus two redundant power supplies, and all plug-ins are hot swappable.

For related information, please refer to the *L-Band and C-Band Fiber-Optic Links for TVRO Satellite Earth Terminals* data sheet (DS00-301OPTO).

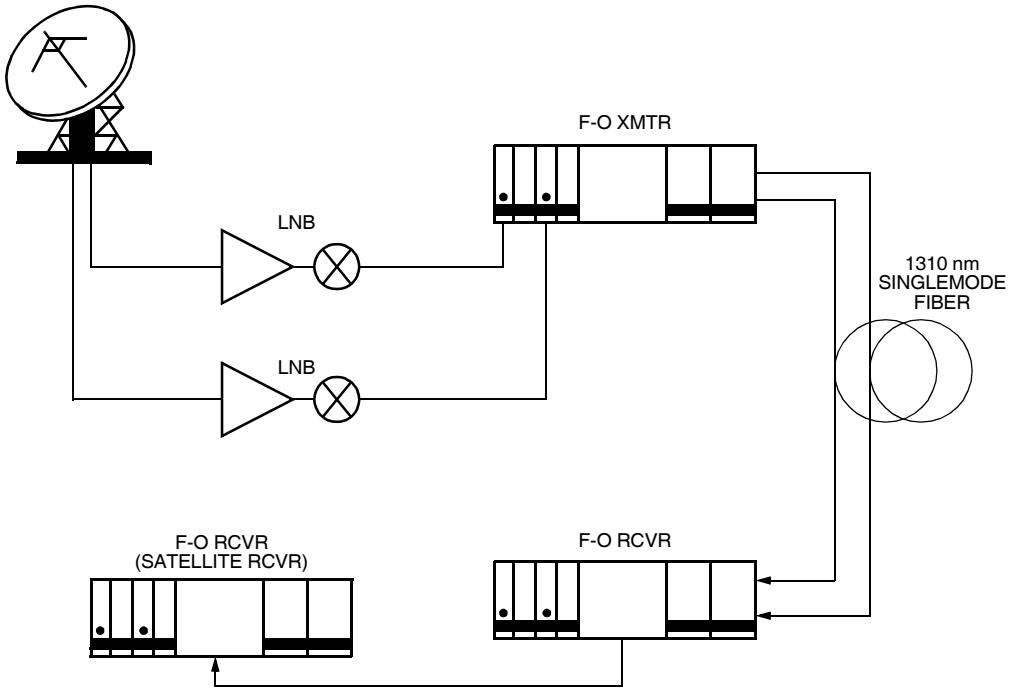

Figure 1. Earth Station Block Diagram

System Applications

Conflicting requirements in the need for an interference-free antenna location and a convenient location for the receiver or headend, have appeared irreconcilable in earth station satellite communications systems. The System 10000 TVRO fiberoptic link is an effective and economical solution to the problem of linking your receiver or headend to a remote earth station antenna.

- Downlink:
  — 650 MHz to 4200 MHz
  — 950 MHz to 11200 MHz
  — 10450 MHz to 11700 MHz
  — 11700 MHz to 12200 MHz
  — 12250 MHz to12750 MHz
- LNB:
  — 950 MHz to 2050 MHz L-Band

Installation and Setup Procedures

Note: Prior to installation, it is strongly recommended that users reference the section on Safety Considerations, including electrostatic discharge and laser safety, beginning on page 5.

This section contains information and procedures for installing the Model 1000XA and 1002XA TVRO fiberoptic link, and for preparing it for operation.

Recommended Test Equipment

- RF power meter.
- Spectrum analyzer.
- Voltameter w/probes; *Fluke*® DMM model 73 Series II or equivalent.
- RF adapter:
  — SMA plug to type N jack
  — SMA plug to BNC or type F jack.
- Items for cleaning optical connectors:
  — Cotton swabs
  — Alcohol (ethanol or methanol)
  — Compressed dust-free air or canned dust-off.

Recommended Tools

- Philips-head screwdriver.
- Diagonal cutters.
- Small crescent wrench.
- Coaxial stripper.
- Coaxial cable crimper.
- 22 AWG wire stripper.
- Multiconductor crimper.
- 5/64 in. ball driver or Allen-head wrench to remove bulkhead optical connector feedthrough.

Unpacking and Inspecting the System

Unpack the system carefully, thoroughly inspecting the equipment to assure that no damage has occurred in shipment. If damage is found, notify the responsible carrier and Agere Systems Inc. immediately.

Carefully check the contents of the shipment against the shipping list. Notify Agere Systems if there is an apparent discrepancy.

Installing System Assemblies

Mechanical installation procedures are identical for the transmitter assembly and the receiver assembly.

- Install each assembly in a standard 19-in. rack
- Shelf angle brackets, 2 required
- Chassis ground cable

Pin Information

Table 1. Transmitter Assembly Pin Assignments for P11–P18

Pin No.	Description
1	Reference Ground
2	Photodiode Current Monitor
3	Low Optical Power Alarm
4	Laser dc Current Monitor
5	Laser Temperature Alarm

Notes:
Mating connector: *Molex* ® P/N 22-01-2057.
Crimp pins: *Molex* P/N 08-50-0114.

Table 2. Receiver Assembly Pin Assignments for P11–P18

Pin No.	Description
1	Reference Ground
2	dc Photocurrent Monitor
3	Low Optical Power Alarm
4	NC
5	NC

Notes:
Mating connector: *Molex* P/N 22-01-2057.
Crimp pins: *Molex* P/N 08-50-0114.

Table 3. Power Supply Status for P19 .

Pin No.	Description
1	Auxiliary Power Supply Status (analog voltages)
2	Main Power Supply Status (analog voltages)
3	Auxiliary Power Supply Fail (N.O.; relay contacts)
4	Auxiliary Power Supply Fail (Center; relay contacts)
5	Auxiliary Power Supply Fail (N.C.; relay contacts)
6	Main Power Supply Fail (Center; relay contacts)
7	Main Power Supply Fail (N.C.; relay contacts)
8	Main Power Supply Fail (N.O.; relay contacts)
9	Ground

Notes:
Mating connector: *Molex* P/N 22-01-2097.
Crimp Pins: *Molex* P/N 08-50-0114.

Table 4. External Input/Output Power Status for P20

Pin No	Description
1	5 Vdc
2	15 Vdc
3	–15 Vdc
4	GND

Notes:
Mating Connector: *Molex* P/N 09-50-3041.
Crimp Pins: *Molex* P/N 08-50-0108.

Outline Diagrams

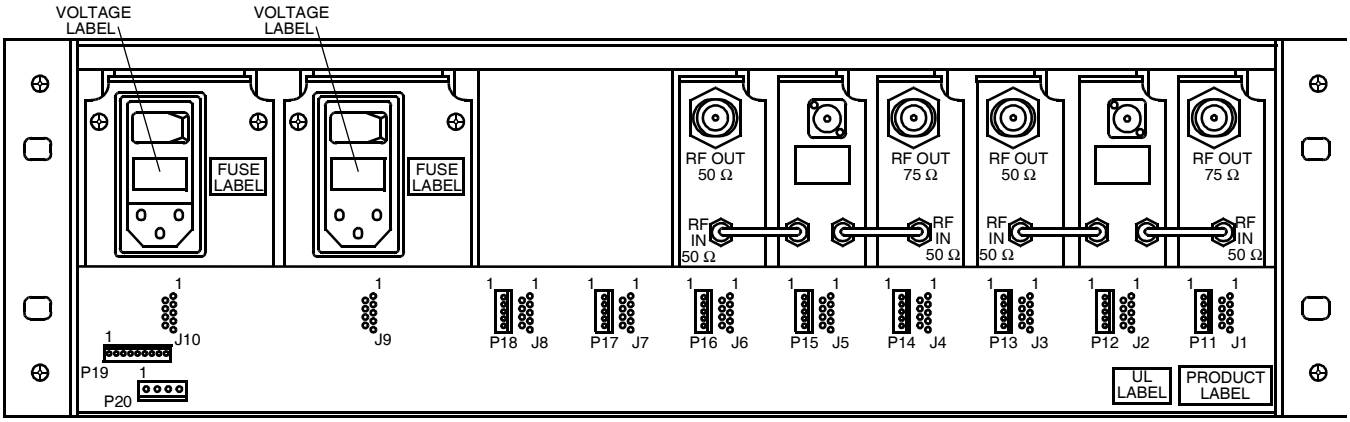

Figure 2. Receiver Assembly Back Panel

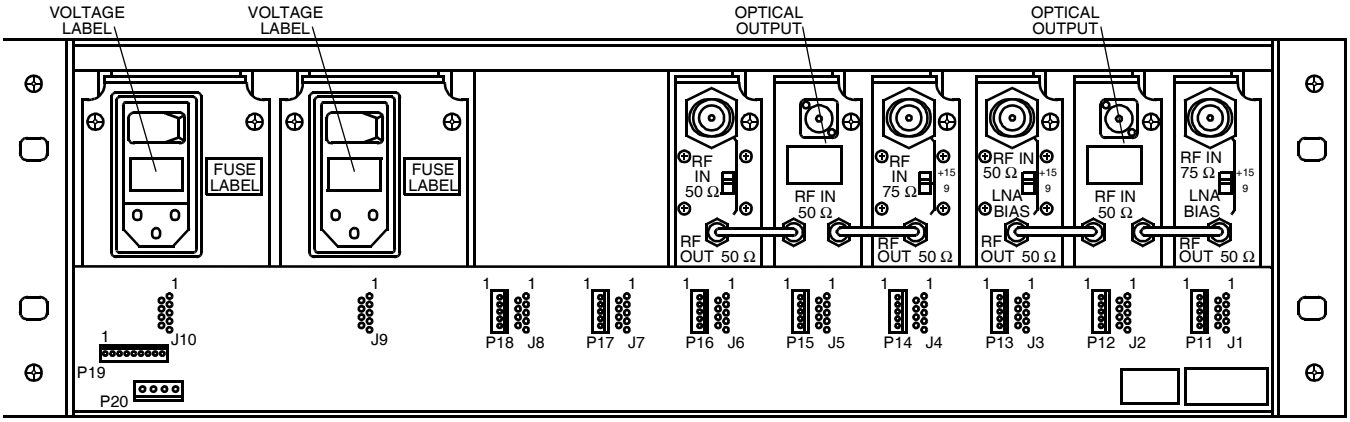

Figure 3. Transmitter Assembly Back Panel

Safety Considerations

Caution: dc voltage may be present on the center conductor of the coaxial cable. To avoid damage to the fuse during installation due to accidental shorting of the coaxial cable to ground, set power switch to 0 before connecting the coaxial cable between the LNB and IGC.

When installing or using this product, observe all safety precautions during handling and operation. Failure to comply with the following general safety precautions and with specific precautions described elsewhere in this manual violates the safety standards of the design, manufacture, and intended use of this product. Agere Systems assumes no liability for the customer's failure to comply with these precautions.

Laser Safety Information

Class IIIb Laser Product

FDA/CDRH Class IIIb laser product. All 5100 Series transmitter versions are Class IIIb laser products per CDRH, 21 CFR 1040 Laser Safety requirements. All versions are Class 3B laser products per *IEC®* 60825-1:1993. The device has been classified with an FDA under accession number to be determined.

This product complies with 21 CFR 1040.10 and 1040.11.

Wavelength = 1300 nm

Maximum power = 30 mW

Product is not shipped with power supply.

Caution: **Use of controls, adjustments, and procedures other than those specified herein may result in hazardous laser radiation exposure.**

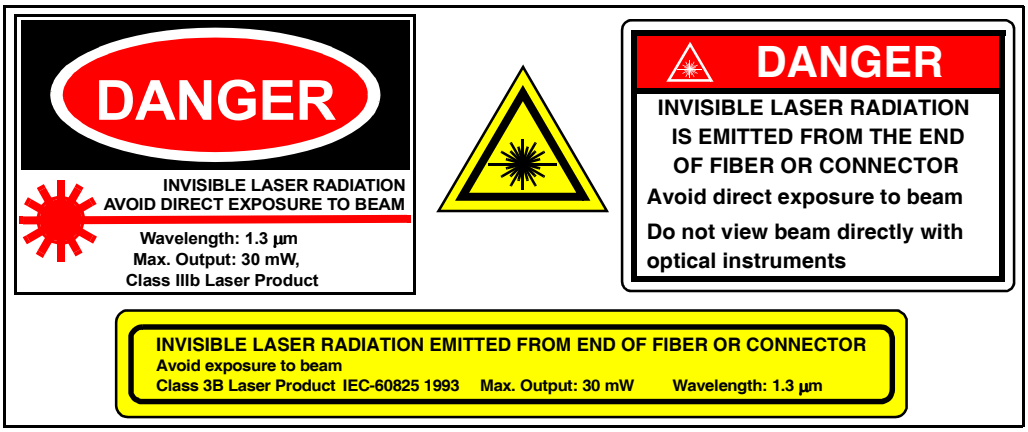

Safety Considerations (continued)

Electrostatic Sensitivity

ESD = electrostatic-sensitive device. Observe electrostatic precautionary procedures.

Semiconductor laser transmitters and receivers provide highly reliable performance when operated in conformity with their intended design. However, a semiconductor laser can be damaged by an electrostatic charge inadvertently imposed by careless handling.

Static electricity can be conducted to the laser chip from the center pin of the RF input connector, and through the dc connector pins. When unpacking and otherwise handling the transmitter, follow ESD precautionary procedures including use of grounded wrist straps, grounded workbench surfaces, and grounded floor mats.

Exposure to electrostatic charge is greatly reduced after the transmitter has been installed in an operational circuit.

The Agere Systems' laser products are used in optical-fiber communications systems for radio- and microwave-frequency, analog fiber-optic links. In normal operation, these systems are fully enclosed and fully shielded by the hermetically sealed laser metal package. Laser bias current is limited by the internal control circuitry. The transmitters are coupled to glass fiber and have 1300 nm optical output wavelength with typically 0. 5 mW to 7 mW output, depending on the model. The optical radiation is confined to the fiber core. Under these conditions, there is no accessible laser emission and hence no hazard to safety or health. Variations in the different models reflect the bandwidth, optical output, noise, and distortion of the laser.

Warning: Since there is no human access to the laser output during system operation, no special operator precautions are necessary when fiber is connected to the transmitter and receiver. During installation, service, or maintenance however, the service technician is warned to take the following precautions:

- Do not look directly into the fiber connector or the fiber (which is connected to the fiber connector before it is connected to the fiber-optic receiver).
- The light emitted from the fiber-optic connector or any fiber connected to the connector is invisible and can be harmful to the human eye.
  — Use either an infrared viewer or fluorescent screen for optical output verification.
- All handling precautions as outlined by the FDA and *ANSI*® Z136.2 and other authorities of class IIIb lasers must be observed.

Do not attempt to modify or service the laser transmitter. Return it to Agere Systems for service and repair. If service is necessary, contact the Agere Systems customer service department for a return authorization.

Fluke is a registered trademark of Fluke Corporation.
Molex is a registered trademark of Molex Inc.
IEC is a registered trademark of The International Electrotechnical Commission.
ANSI is a registered trademark of The American National Standards Institute.

For additional information, contact your Agere Systems Account Manager or the following:

INTERNET:	**http://www.agere.com**
E-MAIL:	**docmaster@agere.com**
N. AMERICA:	Agere Systems Inc., 555 Union Boulevard, Room 30L-15P-BA, Allentown, PA 18109-3286 **1-800-372-2447**, FAX 610-712-4106 (In CANADA: **1-800-553-2448**, FAX 610-712-4106)
ASIA:	Agere Systems Hong Kong Ltd., Suites 3201 & 3210-12, 32/F, Tower 2, The Gateway, Harbour City, Kowloon **Tel. (852) 3129-2000**, FAX (852) 3129-2020 CHINA: **(86) 21-5047-1212** (Shanghai), **(86) 10-6522-5566** (Beijing), **(86) 755-695-7224** (Shenzhen) JAPAN: **(81) 3-5421-1600** (Tokyo), KOREA: **(82) 2-767-1850** (Seoul), SINGAPORE: **(65) 6778-8833**, TAIWAN: **(886) 2-2725-5858** (Taipei)
EUROPE:	**Tel. (44) 7000 624624**, FAX (44) 1344 488 045

Agere Systems Inc. reserves the right to make changes to the product(s) or information contained herein without notice. No liability is assumed as a result of their use or application. Agere, Agere Systems, and the Agere logo are trademarks of Agere Systems Inc.

Copyright © 2002 Agere Systems Inc.
All Rights Reserved

April 2002
AP01-022CATV

agere systems