AN1819
APPLICATION NOTE

Bad Block Management in NAND Flash Memories

This Application Note explains how the Bad Block Management module of the Hardware Adaptation Layer (HAL) software, is used to recognize factory generated Bad Blocks and to manage Bad Blocks that develop during the lifetime of the NAND Flash device.

INTRODUCTION

Bad Blocks are blocks that contain one or more invalid bits whose reliability is not guaranteed. Bad Blocks may be present when the device is shipped, or may develop during the lifetime of the device.

Devices with Bad Blocks have the same quality level and the same AC and DC characteristics as devices where all the blocks are valid. A Bad Block does not affect the performance of valid blocks because it is isolated from the bit line and common source line by a select transistor.

Bad Block Management, Block Replacement and the Error Correction Code software are necessary to manage the error bits in NAND Flash devices. ST provides this software in modules in the Hardware Adaptation Layer (HAL) which manages the hardware functions of the NAND Flash (see Figure 1. and refer to Application notes *AN1820, AN1823*).

Refer to Table 1. for the full list of NAND Flash memories covered by the HAL software and for further information refer to the *NAND128-A, NAND256-A, NAND512-A, NAND01G-A, 528 Byte/ 264 Word Page datasheet*.

Table 1. Product List

Part Number			
NAND128R3A	NAND256R3A	NAND512R3A	NAND01GR3A
NAND128W3A	NAND256W3A	NAND512W3A	NAND01GW3A
NAND128R4A	NAND256R4A	NAND512R4A	NAND01GR4A
NAND128W4A	NAND256W4A	NAND512W4A	NAND01GW4A

TABLE OF CONTENTS

INTRODUCTION 1

Table 1. Product List 1
Figure 1. Software Tool Chain 3

RECOGNIZING BAD BLOCKS 3

Figure 2. Bad Block Management Flowchart 4

BLOCK REPLACEMENT 4

Skip Block Method 4
Reserve Block Method 5
Figure 3. Reserved Block Method. 5

CONCLUSION. 6

REFERENCES 6

REVISION HISTORY. 6

Figure 1. Software Tool Chain

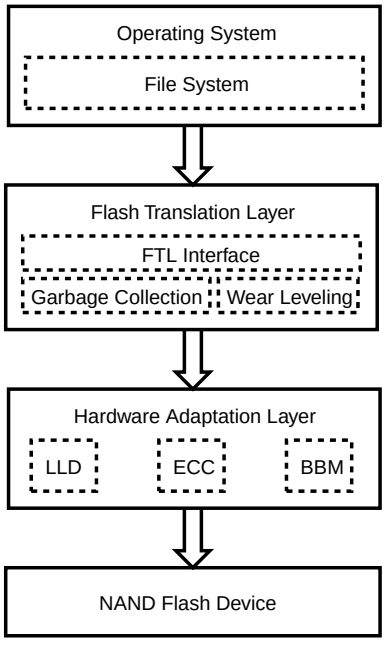

RECOGNIZING BAD BLOCKS

The devices are supplied with all the locations inside valid blocks erased (FFh). The Bad Block Information is written prior to shipping. Any block where the 6th Byte/ 1st Word in the spare area of the 1st or 2nd page (if the 1st page is Bad) does not contain FFh is a Bad Block.

The Bad Block Information must be read before any erase is attempted, as the Bad Block Information may be erased. To allow the system to recognize the Bad Blocks based on the original information, it is recommended to implement the Bad Block Management algorithm shown in Figure 2.

The Bad Block Table is created by reading all the spare areas in the NAND Flash memory. The table is then saved to a good block so that on rebooting the NAND Flash memory, the Bad Block Table is loaded into RAM. The blocks contained in the Bad Block Table are not addressable. So, if the Flash Translation Layer addresses one of the Bad Blocks, the Bad Block Management software redirects it to a good block.

Figure 2. Bad Block Management Flowchart

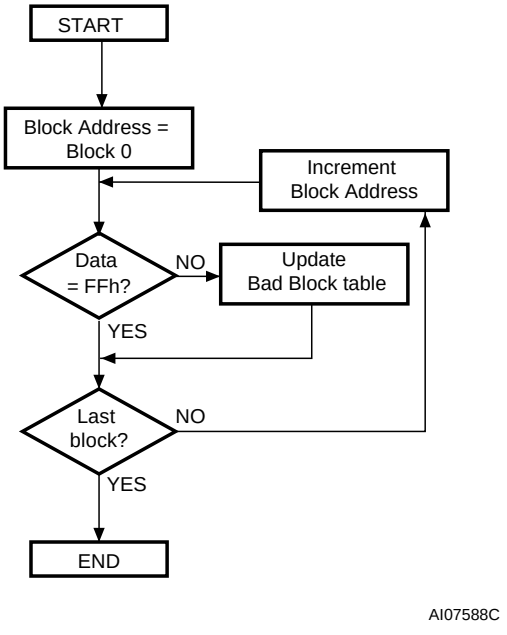

BLOCK REPLACEMENT

During the lifetime of the NAND device additional Bad Blocks may develop. The NAND devices have a Status Register that indicates whether an operation is successful or not. If attempts to program or erase a block give errors in the Status Register, the block is marked as bad.

A block can also be marked as bad when the Error Correction Code (EEC) algorithm detects two or more errors and can correct only one. In this case, the ECC marks the block as bad and the Bad Block Management software re-maps the block address by allocating a new block.

As the failure of a page program operation does not affect the data in other pages in the same block, the block can be replaced by re-programming the current data and copying the rest of the replaced block to an available valid block.

Blocks can be marked as bad and new blocks allocated using two general methods.

Skip Block Method

In the Skip Block method the algorithm creates the Bad Block Table and when the target address corresponds to a Bad Block address, the data is stored in the next good block, skipping the Bad Block.

When a Bad Block is generated during the lifetime of the NAND Flash device, it's data is also stored in the next good block. In this case, the information that indicates which good block corresponds to each developed Bad Block, also has to be stored in the NAND Flash device.

If the Flash Translation Layer writes the logical sector using the Linked List method (see *AN1820*) it will not mark the whole block as bad, but only skip the bad page. With this method the Flash Translation Layer writes the logical sector to a new physical block, marking the old page invalid (and not the entire block).

Reserve Block Method

In the Reserve Block method, the Bad Block Table is created in the same manner as described in Figure 2.. In this method Bad Blocks are not skipped but replaced by good blocks by “re-directing” the Flash Translation Layer to a known good block. For that purpose, the Bad Block Management software creates two areas in the NAND Flash: the User Addressable Block Area and the Reserved Block Area as shown in Figure 3..

The Flash Translation Layer can use the **User Addressable Block Area** to store data whereas the **Reserved Block Area** is only used for Bad Block replacement and to save the Bad Block Table that also keeps track of the re-mapped “developed Bad Blocks”.

To define these two areas, it is necessary to determine the start address and the size of the Reserved Area. The size may either be given by the user, or imposed by the Bad Block Management software (as stated in the *NAND128-A, NAND256-A, NAND512-A, NAND01G-A, 528 Byte/ 264 Word Page datasheet*, for ST NAND Flash devices, the Reserved Area size is equal to 2%). For example if the NAND Flash device is 512Mb, the User Addressable Block Area is 4016 blocks and the Reserved Block Area is from block 4017 to block 4096.

Each time the Flash Translation Layer Writes a logical sector, it calculates the physical address of the block to which it will write. Then, before the Flash Translation Layer starts writing, the Bad Block Management software checks whether the block is bad or not. If it is bad, it returns the address of the good block to which the sector is re-mapped. If the block becomes bad during the NAND Flash lifetime, the Bad Block Management software re-maps the Bad Block, and copies the data it contains to the block that will replace it.

The Bad Block management is completely transparent to the Flash Translation Layer. For the FTL, it is as if the data are written to the same address.

Figure 3. Reserved Block Method

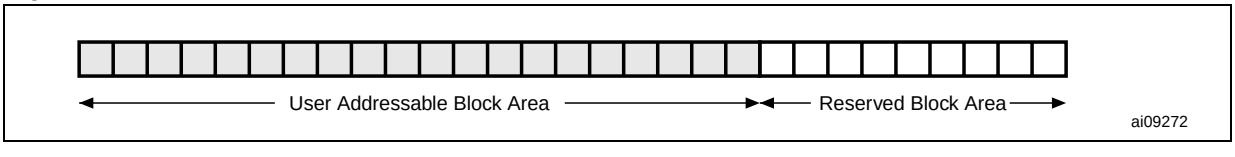

CONCLUSION

To detect factory produced Bad Blocks, and manage any Bad Blocks that may develop over the lifetime of a NAND Flash device, ST recommends to use the Bad Block Management module implemented in the Hardware Adaptation Layer software provided by ST. By using this software, the data contained in a Bad Block are not lost, but are recovered and saved in a good block.

REFERENCES

- NAND128-A, NAND256-A, NAND512-A, NAND01G-A, 528 Byte/ 264 Word Page datasheet
- AN1820 How to Use the FTL and HAL Software Modules to Manage Data in NAND Flash Memories
- AN1821 Garbage Collection in NAND Flash Memories
- AN1822 Wear Leveling in NAND Flash Memories
- AN1823 Error Correction Code in NAND Flash Memories

REVISION HISTORY

Table 2. Document Revision History

Date	Version	Revision Details
19-May-2004	1.0	First issue.

If you have any questions or suggestions concerning the matters raised in this document, please send them to the following electronic mail addresses:

ask.memory@st.com (*for general enquiries*)

Please remember to include your name, company, location, telephone number and fax number.

Information furnished is believed to be accurate and reliable. However, STMicroelectronics assumes no responsibility for the consequences of use of such information nor for any infringement of patents or other rights of third parties which may result from its use. No license is granted by implication or otherwise under any patent or patent rights of STMicroelectronics. Specifications mentioned in this publication are subject to change without notice. This publication supersedes and replaces all information previously supplied. STMicroelectronics products are not authorized for use as critical components in life support devices or systems without express written approval of STMicroelectronics.

The ST logo is a registered trademark of STMicroelectronics.

All other names are the property of their respective owners.

© 2004 STMicroelectronics - All rights reserved

STMicroelectronics GROUP OF COMPANIES
Australia - Belgium - Brazil - Canada - China - Czech Republic - Finland - France - Germany -
Hong Kong - India - Israel - Italy - Japan - Malaysia - Malta - Morocco - Singapore -
Spain - Sweden - Switzerland - United Kingdom - United States
www.st.com