Keywords: thermocouple, temperature measurement, cold junction compensation

Mar 19, 2007

APPLICATION NOTE 4026

Implementing Cold-Junction Compensation in Thermocouple Applications

Abstract: Thermocouples are one of the most widely used temperature-measurement devices because of their ruggedness, repeatability, and fast response time. This application note discusses the basic operation of a thermocouple, which includes the definition and function of a reference (cold) junction. The note also gives guidelines for selecting a device for cold-junction temperature measurement based on application needs. Three circuit examples are shown.

Introduction

Of the many transducers available for temperature-measurement applications, thermocouples are among the most common. Thermocouples are found in everyday systems such as automobiles and home appliances. They offer a cost-effective means for measuring a much wider range of temperatures than other common solutions like resistance temperature devices (RTDs), thermistors, and temperature-sensing integrated circuits (ICs). In addition, ruggedness, repeatability, and fast response time make thermocouples a popular choice in many environments.

There are, however, some disadvantages to using thermocouples, notably its lack of linearity. Although thermocouples can be used over a wider range of temperatures than RTDs and temperature-sensing ICs, they are far less linear. Also, RTDs and temperature-sensing ICs typically offer better sensitivity and accuracy, two desirable characteristics for more precise applications. Thermocouple signals are very low-level and often require amplification or a high-resolution data converter to process the signals.

Despite the above disadvantages, overall cost, ease of use, and wide temperature range still make thermocouples popular.

Thermocouple Basics

Thermocouples are differential temperature-measurement devices. They are constructed with two wires made from dissimilar metals. One wire is predesignated as the positive side, and the other as the negative. **Table 1** lists the four most common thermocouple types, the metals or alloys used, and the temperature range allowed for each type. Each thermocouple type offers a unique thermoelectric characteristic over its specified temperature range.

Table 1. Basic Thermocouple Characteristics

Type	Positive Metal/Alloy	Negative Metal/Alloy	Temperature Range (°C)
T	Copper	Constantan	-200 to +350
J	Iron	Constantan	0 to +750
K	Chromel	Alumel	-200 to +1250
E	Chromel	Constantan	-200 to +900

If the two different metals are joined (i.e., welded or soldered) to form two junctions, as in **Figure 1a**, the voltage generated by the loop is a function of the temperature difference between the two junctions. This phenomenon is known as the Seebeck effect, generally described as the process in which thermal energy is converted into electrical energy. The Seebeck effect is the opposite of the Peltier effect, in which electrical

energy is converted into thermal energy, as observed in applications such as thermoelectric coolers. Figure 1a shows that the measured output voltage, V_{OUT}, is the difference between the measuring (hot) junction voltage and the reference (cold) junction voltage. Since V_H and V_C are generated by a temperature difference between the two junctions, V_{OUT} is also a function of this temperature difference. The scale factor, α, which relates the voltage difference to the temperature difference, is known as the Seebeck coefficient.

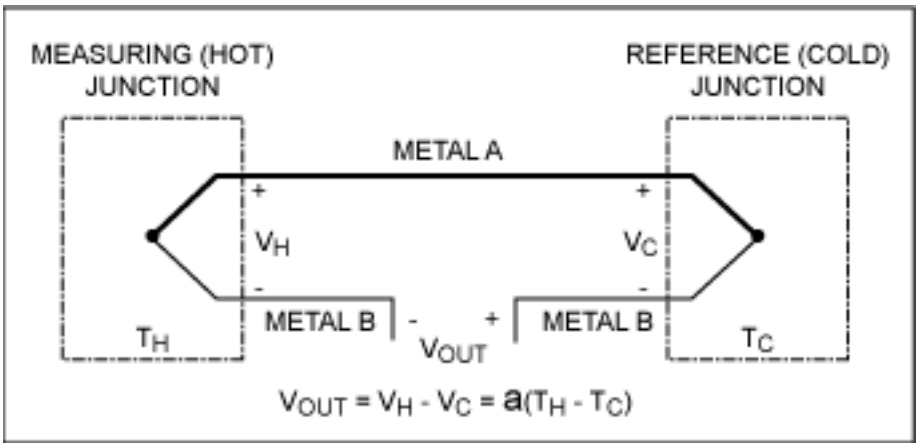

Figure 1a. The loop voltage generated by the temperature difference between two junctions in the thermocouple is the result of the Seebeck effect.

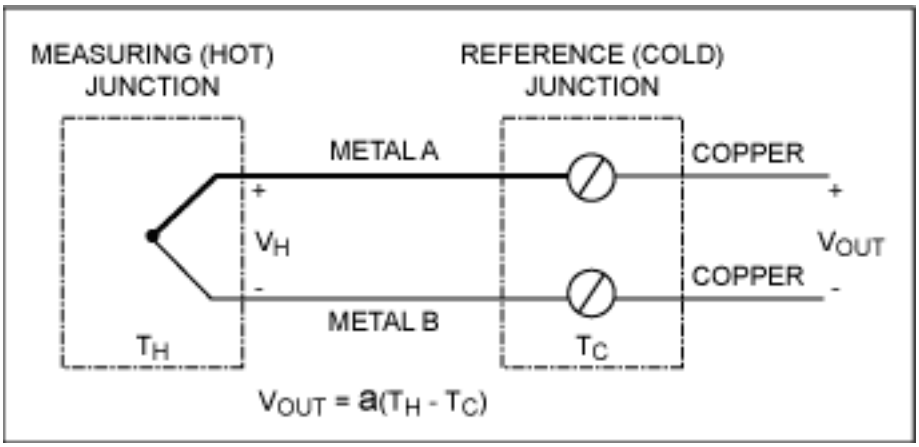

Figure 1b. The most common thermocouple configuration has the two wires of a thermocouple joined at one end. The open end of each wire is connected to an isothermic connector made of copper.

Figure 1b illustrates the configuration most commonly used in thermocouple applications. This configuration introduces a third metal (also known as an *intermediate* metal) into the loop and two additional junctions. In this example, the open ends of each wire are electrically connected to wires or traces made of copper. These connections introduce two additional junctions into the system. As long as these two junctions are at the same temperature, the intermediate metal (copper) has no effect on the output voltage. This configuration allows the thermocouple to be used without a separate reference junction. V_{OUT} is still a function of the difference between hot- and cold-junction temperatures, related by the Seebeck coefficient. However, since the thermocouple measures temperature differentially, the cold-junction temperature must be known in order to determine the actual temperature measured at the hot junction.

The simplest case occurs when the cold junction is at 0°C, also known as an ice-bath reference. If T_C = 0°C, then $V_{OUT} = V_H$. In this case, the voltage measured at the hot junction is a direct translation of the actual temperature at that junction. The National Bureau of Standards (NBS) provides lookup tables containing the characterization data of thermocouple voltages vs. temperatures for various types of thermocouples. The data are all based on a cold-junction temperature of 0°C. With an ice-bath reference, you can determine the temperature of the hot junction by looking for V_H in the appropriate table.

In the early days of thermocouples, the ice-bath reference served as the standard in thermocouple applications. Implementing an ice bath today is impractical in most situations. Therefore, when the cold junction is not at 0°C,

the temperature of this junction must be known in order to determine the actual hot-junction temperature. The output voltage of the thermocouple must also be compensated to account for the voltage created by the nonzero cold-junction temperature. This process is known as cold-junction compensation.

Selecting a Device for Cold-Junction Temperature Measurement

As explained above, to implement cold-junction compensation, the temperature of the cold junction must be determined. This calculation can be accomplished with any type of temperature-measurement device. Among the more popular devices are temperature-sensing ICs, thermistors, and RTDs. Each family of devices offers advantages and disadvantages over the others, so the requirements of a specific application will determine which type to use.

For applications requiring extreme accuracy, a calibrated platinum RTD offers the best performance across the widest temperature range. This performance comes, however, with high cost.

Thermistors and silicon temperature-sensing ICs are cost-effective alternatives to RTDs for applications that do not require such high accuracy. Thermistors operate across a wider temperature range than silicon ICs. Nonetheless, temperature-sensing ICs are often preferred over thermistors because of their linearity; correcting a thermistor's nonlinearity can require too much work from the system's microcontroller. The temperature-sensing ICs provide excellent linearity but operate across a narrower temperature range.

In summary, a cold-junction temperature-measurement device must be selected to match the requirements of the system. As with any temperature-measurement application, accuracy, temperature range, cost, and linearity are all significant considerations in the selection process. Each requirement must be weighed carefully in order to select the optimal combination of cost and performance.

Crunching the Numbers

Once you establish a method of cold-junction compensation, the compensated output voltage must be translated into the corresponding temperature. A simple "translation" method uses the lookup tables from the NBS. Implementing lookup tables in software requires memory for storage, but the tables provide a quick, accurate solution when measurements must be repeated continuously. Two other methods for translating thermocouple voltages to temperature require somewhat more work than lookup tables: 1) linear approximation using polynomial coefficients; and 2) analog linearization of the thermocouple output signal.

Software linear approximation is popular because no storage is necessary except for the predetermined polynomial coefficients. There is, however, a disadvantage to this method: the processing time associated with solving multiple-order polynomials. The processing time increases for higher order polynomials, which are typically required when dealing with a wider range of temperatures. For temperatures where higher order polynomials are required, lookup tables can prove both more accurate and more efficient than linear approximation.

Before the days of modern software, analog linearization was commonly used to convert the measured voltage to a temperature (in addition to manually searching through lookup tables). This hardware-based method uses analog circuitry to correct for the nonlinearity in a thermocouple's response. Its accuracy depends on the order of the correction approximation used. This approach is still commonly used in multimeters that accept thermocouple signals.

Application Circuits

The following examples show three methods of cold-junction compensation that use silicon temperature-sensing ICs. The three circuits focus on simple solutions for applications requiring only a narrow cold-junction temperature range (0°C to +70°C and -40°C to +85°C) and accuracy to within a few degrees. Circuit 1 includes a local temperature-sensing IC near the cold junction to determine its temperature. Circuit 2 includes a remote-diode temperature sensor that is fed by a diode-connected transistor mounted directly on the thermocouple connector. Circuit 3 includes an analog-to-digital converter (ADC) with on-chip cold-junction compensation. All three examples use the K-type thermocouple, which is constructed with chromel and alumel.

Example #1

In the circuit shown in **Figure 2**, a 16-bit sigma-delta ADC converts the low-level thermocouple voltage into a 16-bit serial digital output. An integrated programmable-gain amplifier increases the ADC's resolution, which is often needed when working with low-level thermocouple signals. A temperature-sensing IC, located in close proximity to the thermocouple connector, measures the temperature in the vicinity of the cold junction. This method is based on the assumption that the temperature at the IC is approximately the same as the temperature at the cold junction. The output voltage from the cold-junction temperature sensor is converted by channel 2 of the ADC. The temperature sensor's on-chip 2.56V reference eliminates the need for a separate reference IC.

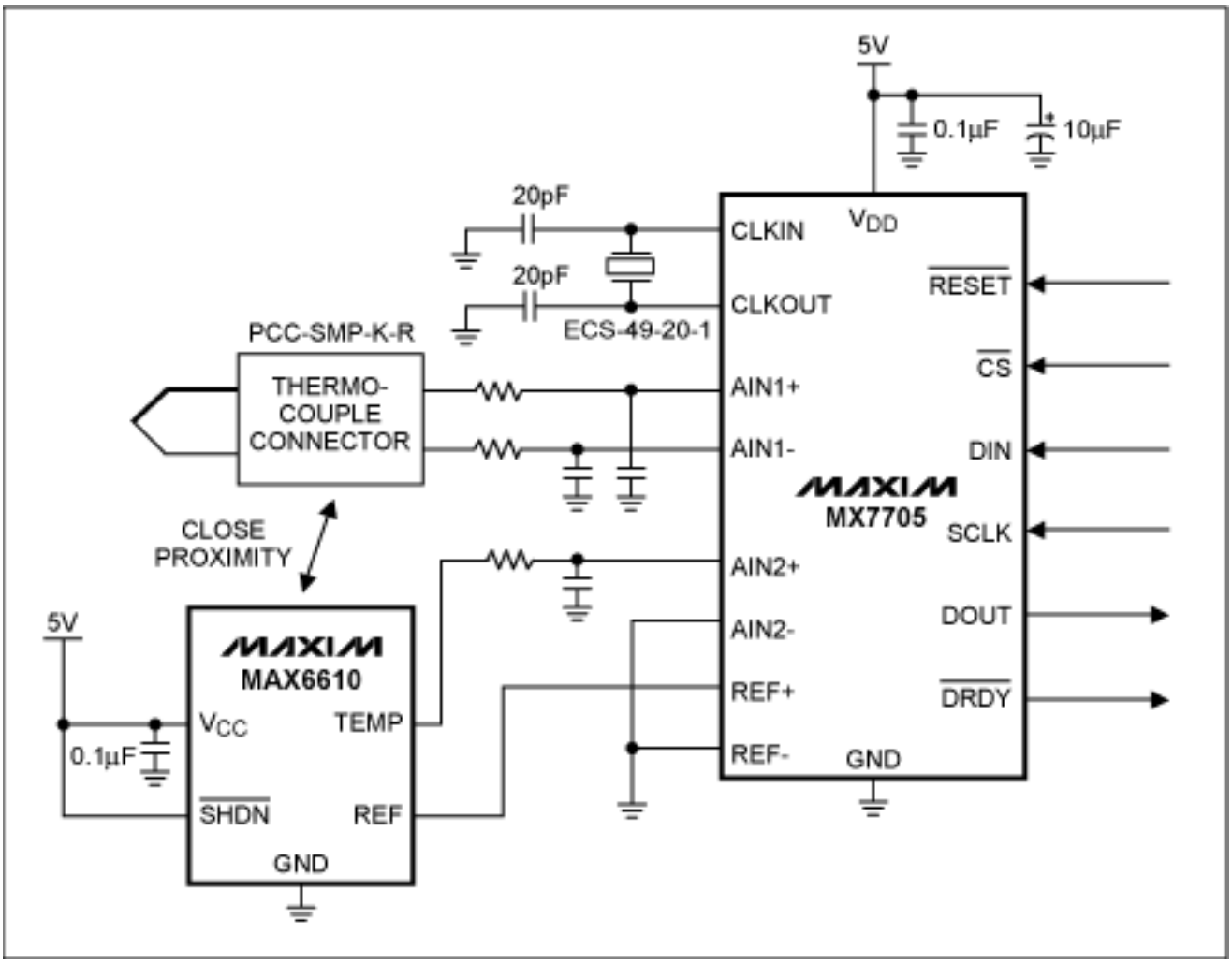

Figure 2. A local temperature-sensing IC (MAX6610) determines the cold-junction temperature. The temperature-sensing IC is located near the thermocouple connector (cold junction). The output voltages for the thermocouple and the cold-junction temperature sensor are converted by a 16-bit ADC (MX7705).

When operated in bipolar mode, the ADC can convert positive and negative levels of the thermocouple voltage present at channel 1. Channel 2 of the ADC converts the single-ended voltage output of the MAX6610 into a digital signal for the microcontroller to process. The temperature-sensing IC's voltage output is proportional to the measured cold-junction temperature.

To determine the actual hot-junction temperature, you must first determine the cold-junction temperature. Then use the lookup tables provided by the NBS for K-type thermocouples to translate the cold-junction temperature into its corresponding thermoelectric voltage. After correcting for the PGA's gain, add this voltage to the digitized thermocouple reading. Then translate the sum into a temperature, again using the lookup tables. The result is the actual temperature at the hot-junction. **Table 2** displays measurements taken while sweeping the cold junction from -40°C to +85°C in an oven and keeping the hot junction at +100°C in a separate oven. The accuracy of the measurements depends greatly on the accuracy of the local temperature-sensing IC and the oven temperature.

Table 2. Sample Measurements for the Figure 2 Circuit with the Cold Junction and Hot Junction in Separate Ovens

	Cold-Junction Temperature (°C)	Measured Hot-Junction Temperature* (°C)
Measurement #1	-39.9	+101.4
Measurement #2	0.0	+101.5
Measurement #3	+25.2	+100.2
Measurement #4	+85.0	+99.0

* The values appearing in the column labeled "Measured Hot-Junction Temperature" are the compensated, hot-junction temperature measurements taken from the circuit.

Example #2

In **Figure 3**, a remote-diode temperature-sensing IC measures the circuit's cold-junction temperature. Unlike a local temperature-sensing IC, the remote-diode temperature sensor need not be near the cold junction since it uses an external diode-connected NPN transistor to measure the cold-junction temperature. This transistor is mounted directly on the thermocouple connector's copper retainer clip. The temperature-sensing IC converts the signal from this diode-connected transistor into a digital output.

The ADC's channel 1 converts the thermocouple voltage into a digital output. Channel 2 of the ADC is unused and connected to ground. The ADC's reference input is fed by a stable 2.5V reference IC.

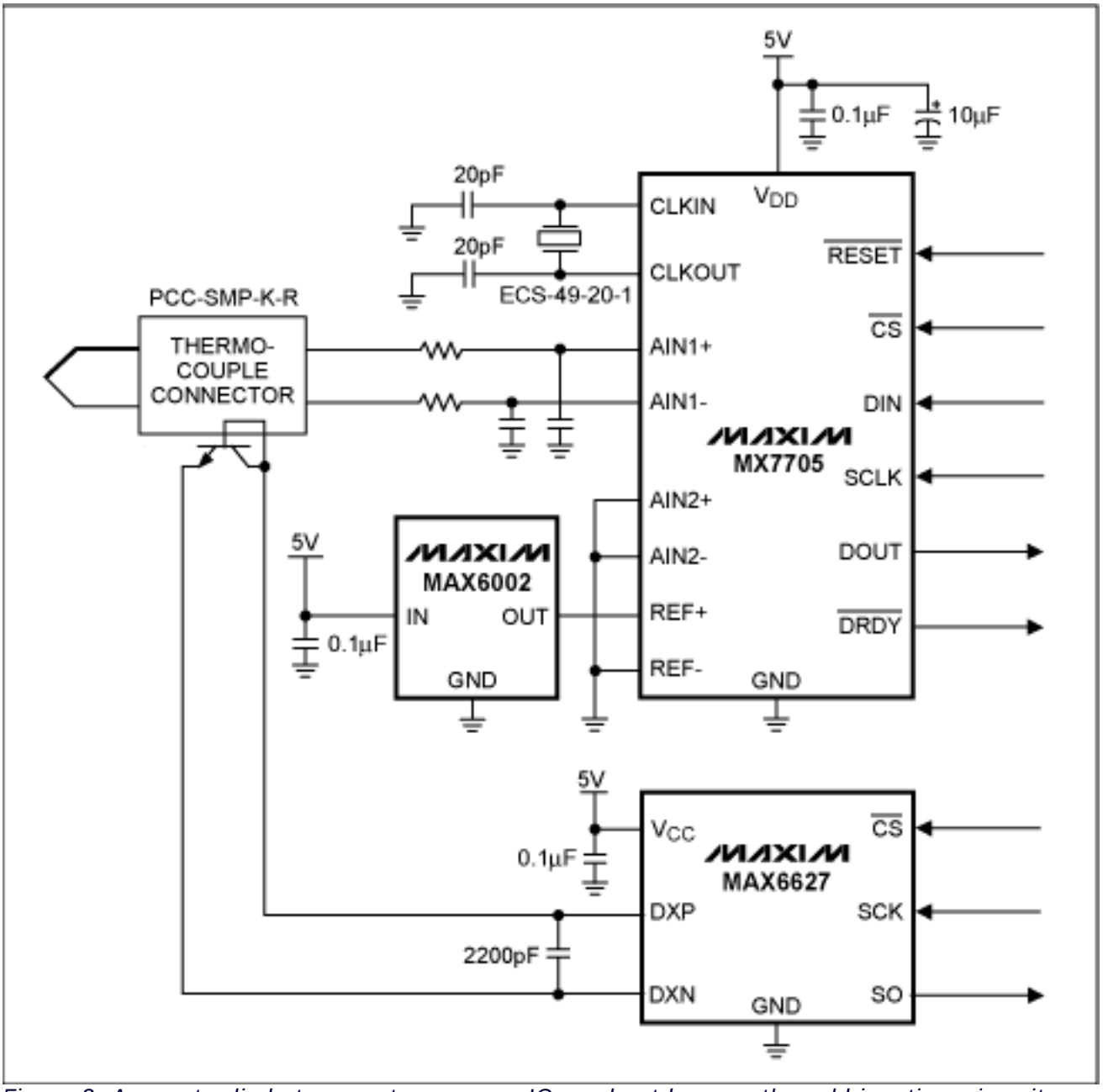

Figure 3. A remote-diode temperature-sensor IC need not be near the cold junction, since it uses an external diode to sense the temperature. This diode can be mounted directly on the optional retainer clip of the thermocouple connector. The MAX6002 provides a stable 2.5V reference voltage for the ADC.

Table 3 displays the measurements taken with the cold-junction temperature swept from -40°C to +85°C while keeping the hot-junction temperature at +100°C. The accuracy of the measurements depends on the accuracy of both the remote-diode temperature-sensing IC and the oven temperature.

Table 3. Sample Measurements for the Figure 3 Circuit with the Cold Junction and Hot Junction in Separate Ovens.

	Cold-Junction Temperature (°C)	Measured Hot-Junction Temperature* (°C)
Measurement #1	-39.8	+99.1
Measurement #2	-0.3	+98.4
Measurement #3	+25.0	+99.7
Measurement #4	+85.1	+101.5

* The values appearing in the column labeled "Measured Hot-Junction Temperature" are the compensated, hot-

junction temperature measurements taken from the circuit.

Example #3

Figure 4 includes an IC that combines a 12-bit ADC with a temperature-sensing diode. The temperature-sensing diode converts the ambient temperature into a voltage. The IC takes this voltage and the thermocouple voltage and calculates the compensated hot-junction temperature. The digital output is the compensated hot-junction temperature measured by the thermocouple. The guaranteed temperature error of this device is within ±9LSBs for hot-junction temperatures between 0°C to +700°C. Although this device can measure a wide range of hot-junction temperatures, it cannot measure temperatures below 0°C.

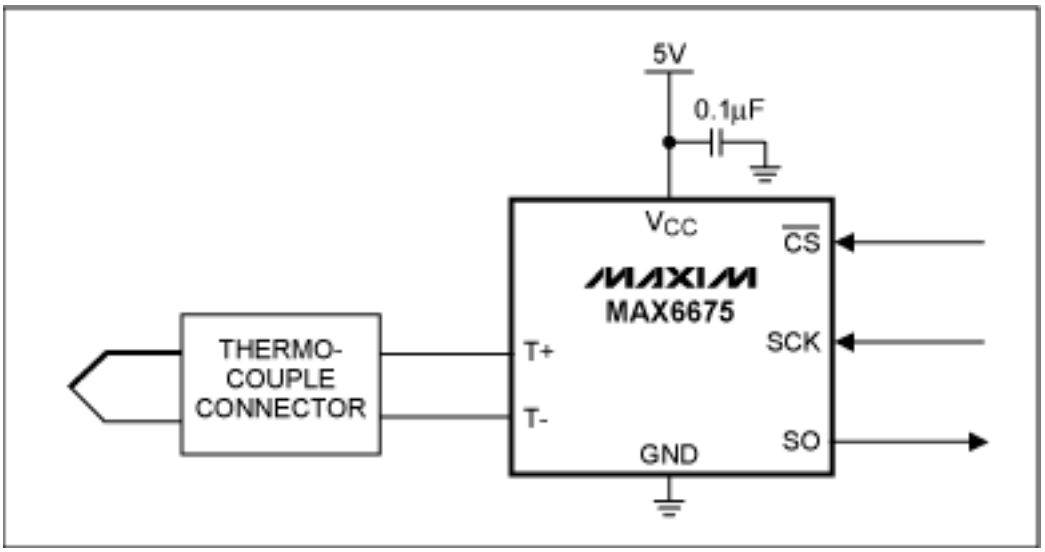

Figure 4. An ADC with integrated cold-junction compensation converts the thermocouple voltage without the need for external compensation.

Table 4 displays measurements taken from the circuit of Figure 4 with the cold-junction temperature swept from 0°C to +70°C while keeping the hot junction at +100°C.

Table 4. Sample Measurements for the Figure 4 Circuit with the Cold Junction and Hot Junction in Separate Ovens

	Cold-Junction Temperature (°C)	Measured Hot-Junction Temperature* (°C)
Measurement #1	0.0	+100.25
Measurement #2	+25.2	+100.25
Measurement #3	+50.1	+101.0
Measurement #4	+70.0	+101.25

*The values appearing in the column labeled "Measured Hot-Junction Temperature" are the decimal representation of the digital outputs provided by the circuit.

Conclusion

When working with thermocouples, you must establish a reference point because thermocouples are differential temperature-measurement devices. A thermocouple provides a voltage that represents the temperature difference between the hot and cold junctions. If you know both the temperature of the cold junction and the temperature of the hot junction relative to the cold-junction temperature, you can determine the actual hot-junction temperature.

The main selection criteria for the appropriate cold-junction compensation device are accuracy, cost, linearity, and temperature range. Some platinum RTDs offer the best accuracy, but at high cost. Thermistors are inexpensive and operate over a wide temperature range, but their lack of linearity can be problematic. Silicon temperature-sensing ICs operate over a narrow temperature range, but offer reasonable accuracy, linearity, and low cost, thus making them a suitable choice for many thermocouple cold-junction compensation applications.

A similar article appeared on the *ECN* website in March 2005.

Application Note 4026: http://www.maxim-ic.com/an4026

More Information
For technical questions and support: http://www.maxim-ic.com/support
For samples: http://www.maxim-ic.com/samples
Other questions and comments: http://www.maxim-ic.com/contact

Related Parts

MAX6002:	QuickView --	Full (PDF) Data Sheet --	Free Samples
MAX6610:	QuickView --	Full (PDF) Data Sheet --	Free Samples
MAX6627:	QuickView --	Full (PDF) Data Sheet --	Free Samples
MAX6675:	QuickView --	Full (PDF) Data Sheet --	Free Samples
MX7705:	QuickView --	Full (PDF) Data Sheet --	Free Samples

AN4026, AN 4026, APP4026, Appnote4026, Appnote 4026
Copyright © by Maxim Integrated Products
Additional legal notices: http://www.maxim-ic.com/legal