Keywords: serializer, deserializer, SerDes, preemphasis, equalization, STP, shielded twisted pair, video, high speed data, cable compensation, GMSL, gmsl

Nov 23, 2011

TUTORIAL 5045

An Introduction to Preemphasis and Equalization in Maxim GMSL SerDes Devices

By: Caglar Yilmazer
Nov 23, 2011

Abstract: Transmit preemphasis and receive equalization can allow serializer/deserializer (SerDes) devices to operate over inexpensive cables or over extended distances. This application note describes how signals are degraded over cables and how to compensate for that degradation. Additionally, this document explains how to achieve a robust link with Maxim gigabit multimedia serial link (GMSL) products when using lossy cables. The article also provides an overview on line equalization.

A similar version of this article appeared on November 2, 2011 on *John Day's Automotive Electronics News*.

Introduction

Recent advances in video applications, along with the exponential expansion of data traffic volume, have raised the demand for higher data rates. As a result, low-cost twisted-pair (TP) cables have gained special interest. However, frequency-dependent attenuation over long runs of these TP cables is a major limiting factor to their optimal use. This frequency-dependent attenuation causes significant intersymbol interference (ISI) in the received signal, which, in turn, creates difficulty for clock and data recovery and causes a higher bit-error rate (BER). Figure 1 shows the representation of a transmitted signal being degraded by the cable before the signal arrives at the receiver. By significantly reducing ISI and recovering the severely degraded data, the transmitter and the receiver can employ some form of line equalization to enable reliable operation.

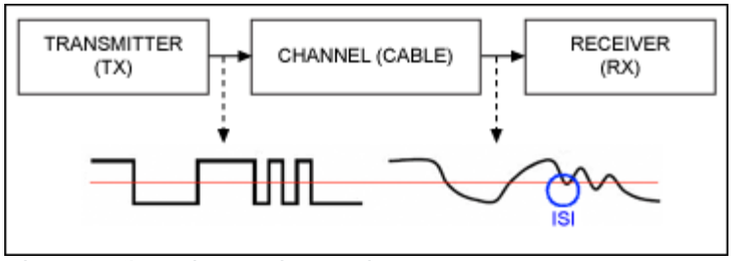

Figure 1. ISI at the receiver end.

The high-speed 3.125Gbps transceivers in Maxim GMSL parts provide a robust link, by allowing the system designer to dynamically program the equalization level for a specific cable. The transmitter and receiver both have equalization adjustments that can be programmed either separately or together to extend the transmission distance. This flexible equalization adjustment allows the use of a wide range of low-cost lossy cables.

This application note explains how to design a robust link with Maxim GMSL products and lossy cables. It also provides an overview of line equalization.

GMSL Transmitter Preemphasis and Receiver Equalization

The GMSL link employs transmitter preemphasis and receiver equalization to compensate the losses of the transmission.

Transmitter Preemphasis

When no equalization is applied at the receiver end, a high-frequency "0" pulse may not be able to reach the midlevel of the signal swing after consecutive "1's", as shown in Figure 2. The figure illustrates how frequency-dependent attenuation can be overcome by emphasizing transitions and deemphasizing "no transitions."

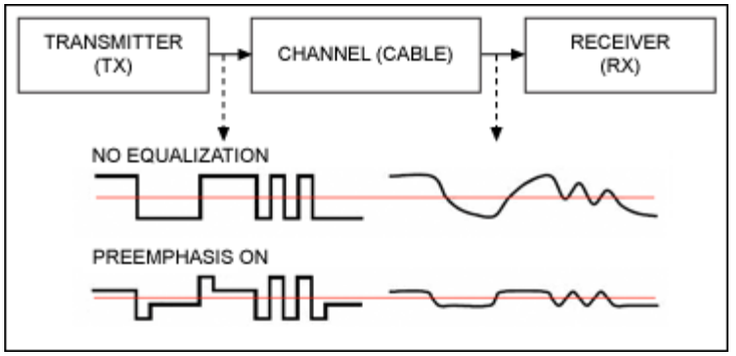

Figure 2. Preemphasis filtering in time domain.

The cable has a lowpass transfer function due to the conductor and dielectric losses, as shown in Figure 3. By utilizing equalization (a highpass transfer curve), a flat (uniform attenuation) system frequency response can be obtained within the bandwidth of the desired frequency range.

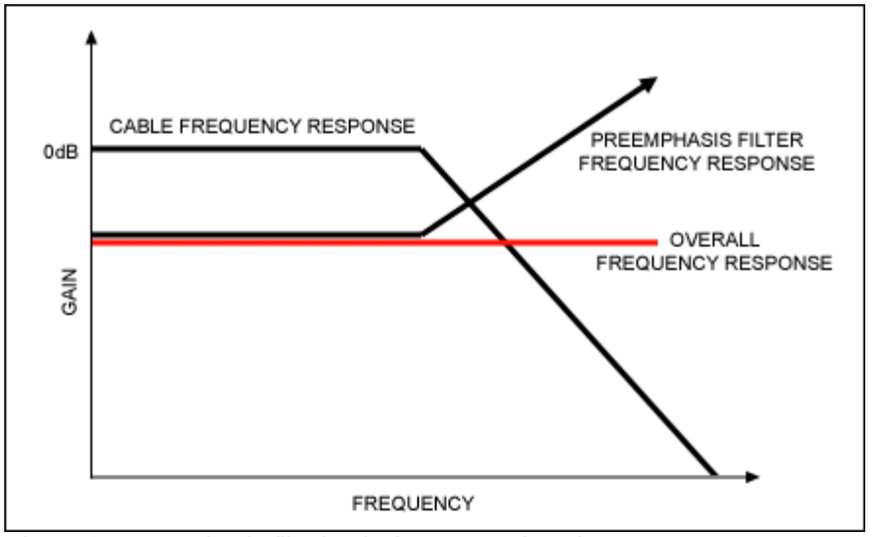

Figure 3. Preemphasis filtering in frequency domain.

Effective use of this equalization technique will affect three main system design parameters:

- Cable length
- Cable type
- Maximum system data rate

For instance, the totally closed eye at the end of a 10m cable can be reasonably opened by 6dB preemphasis (Figure 4).

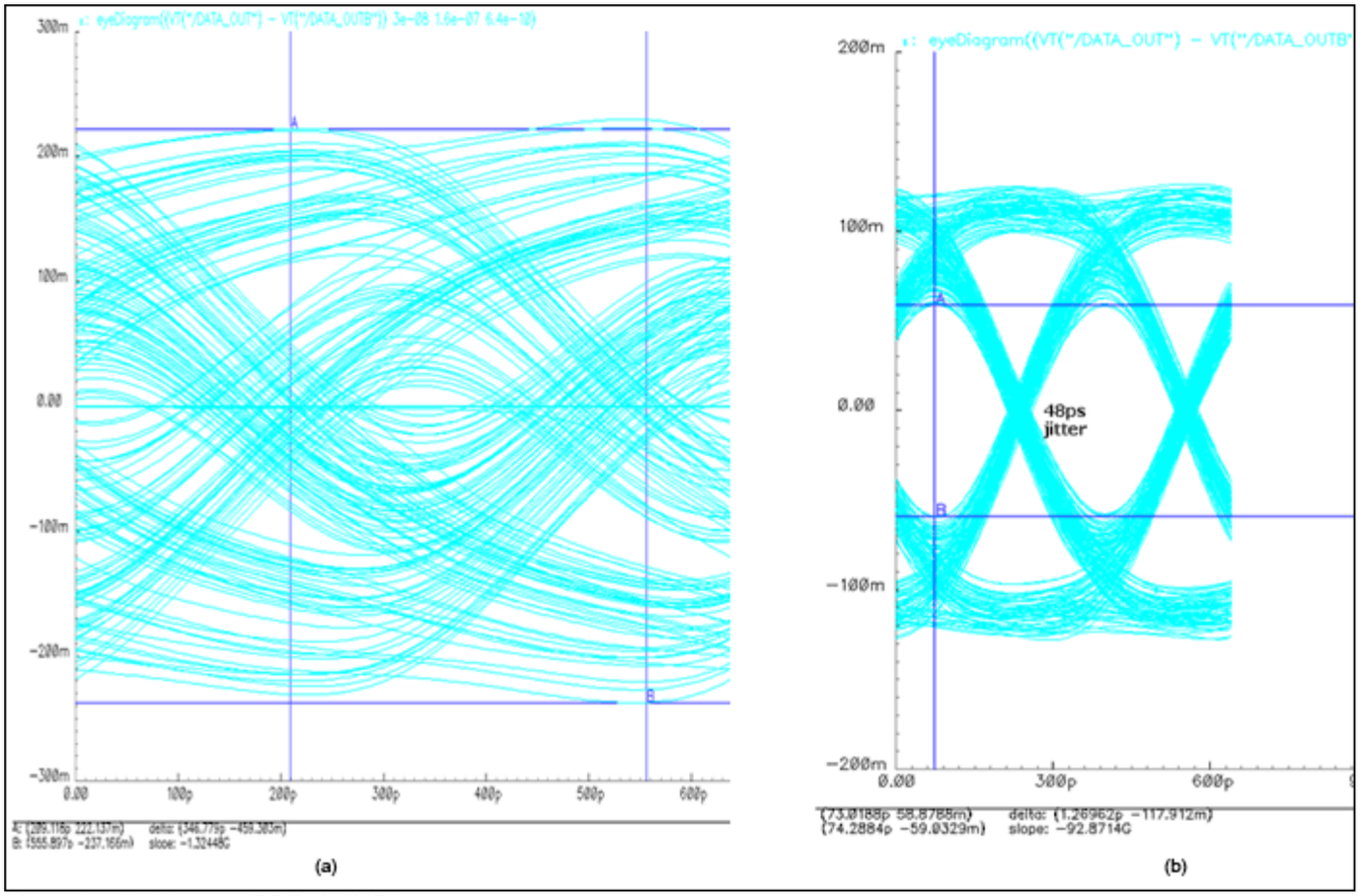

More detailed image (PDF, 1.3MB)

Figure 4. 3.125Gbps data after 10m cable: (a) none vs. (b) 6dB preemphasis.

As described in the MAX9259 data sheet, the preemphasis level is set by register address 0x05, D[3:0]. The user can program the preemphasis level based on Table 1. The negative preemphasis levels correspond to where high-frequency terms are not emphasized, but only the low-frequency terms are deemphasized. It is also important to note that over-boosting will cause a slight increase in the timing jitter.

Table 1. Preemphasis and Deemphasis Levels

0x05 D[3:0]	Preemphasis Level (dB)
1000	1.1
1001	2.2
1010	3.3
1011	4.4
1100	6.0
1101	8.0
1110	10.5
1111	14.0
	Deemphasis Level (dB)
0000	Not used
0001	-1.2
0010	-2.5
0011	-4.1
0100	-6.0
0111	Not used

In the following sections, how to utilize both the transmitter and receiver equalizers will be discussed, along with tabular test data.

Receiver Equalization

The basic idea behind the receiver equalization is described in Figure 5. The lossy link attenuates the forward channel data with an approximate first-order transfer function that has a much lower bandwidth than the data frequency (data frequency, f_b, is equal to one-half of the bit rate). This causes deterministic jitter due to intersymbol interference. Moreover, the eye diagram at the end of this lossy cable can be totally closed for long cables. To compensate for this loss, the data is first processed through a transfer function, which is, ideally, the inverse of the cable transfer function. Hence, a sufficient bandwidth can be obtained when the link and the equalizer are cascaded. A 12-level programmable-gain approach was implemented in GMSL deserializers to prevent under- or over-boosting for different cable lengths. The gain can be set to 12 different levels of boost, ranging from 2dB to 13dB.

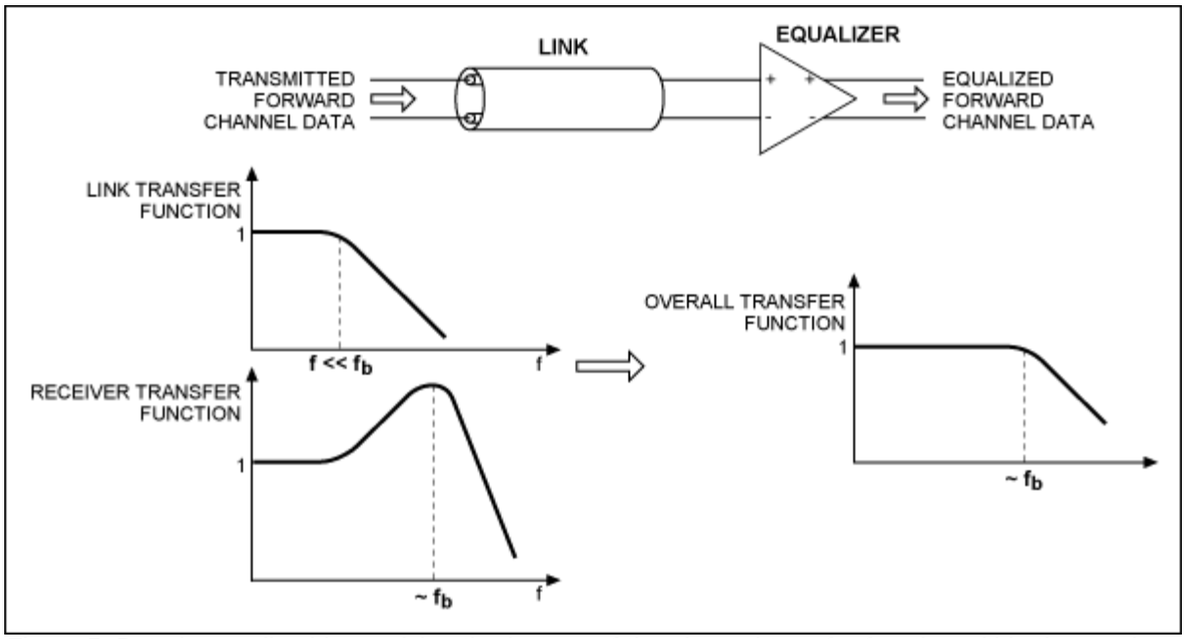

Figure 5. Data is equalized by applying the inverse of the channel transfer function within the receiver.

The receiver transfer function (AC characteristic) is shown in Figure 6 for different boost settings. The channel plus receiver transfer function are shown in Figure 7 for a 10m STP cable. Different boost levels are overlaid in this figure. The overall transfer function becomes maximally flat within the frequency range of interest when the boost word is 8 (9.4dB). The receiver input and output eye diagrams for a 10m STP cable are shown in Figure 8. Notice how the equalizer gain boost opens the totally closed eye.

What happens if the overall transfer function is not flat? In terms of ISI jitter, over-boosting is less harmful than under-boosting. As illustrated in Figure 9, when the boost level decreases below the optimal value, output jitter increases very quickly. Contrastingly, jitter increases slowly when the boost level increases above the optimal point.

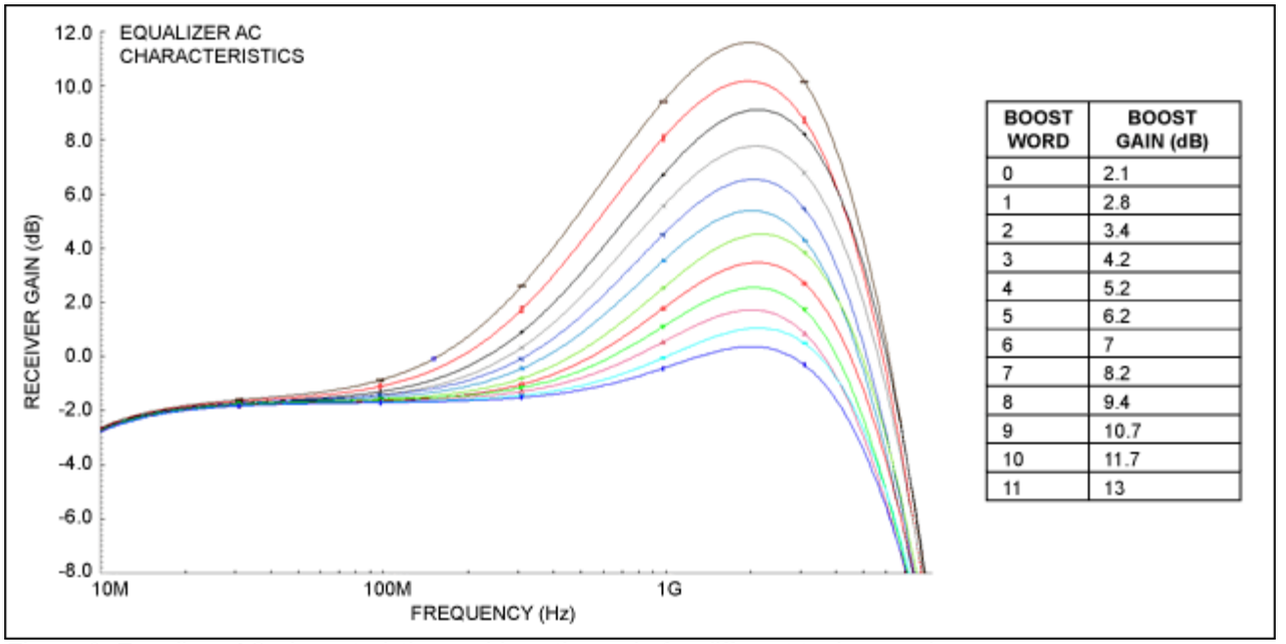

BOOST WORD	BOOST GAIN (dB)
0	2.1
1	2.8
2	3.4
3	4.2
4	5.2
5	6.2
6	7
7	8.2
8	9.4
9	10.7
10	11.7
11	13

Figure 6. Equalizer AC characteristics and boosting gain for different tuning words.

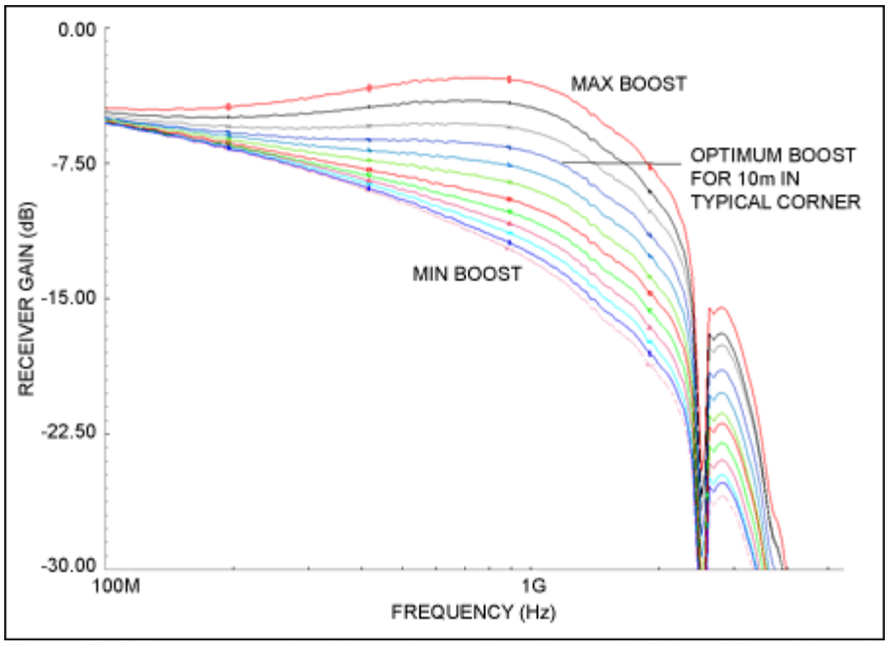

Figure 7. AC response of cable and equalizer (cascaded) for different boost levels for a 10m STP cable.

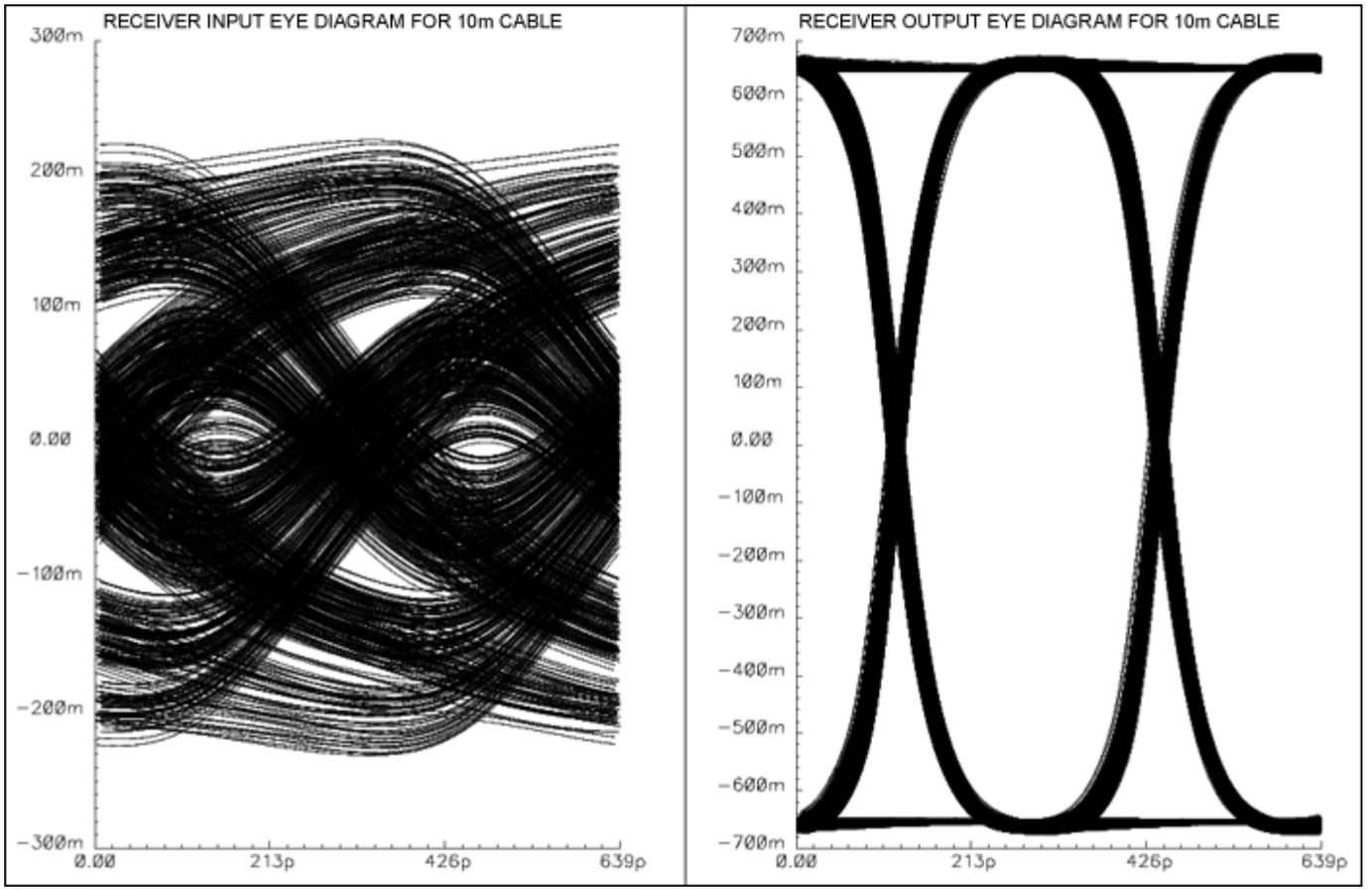

Figure 8. Receiver input and output eye diagrams for a 10m cable when the boost is optimal.

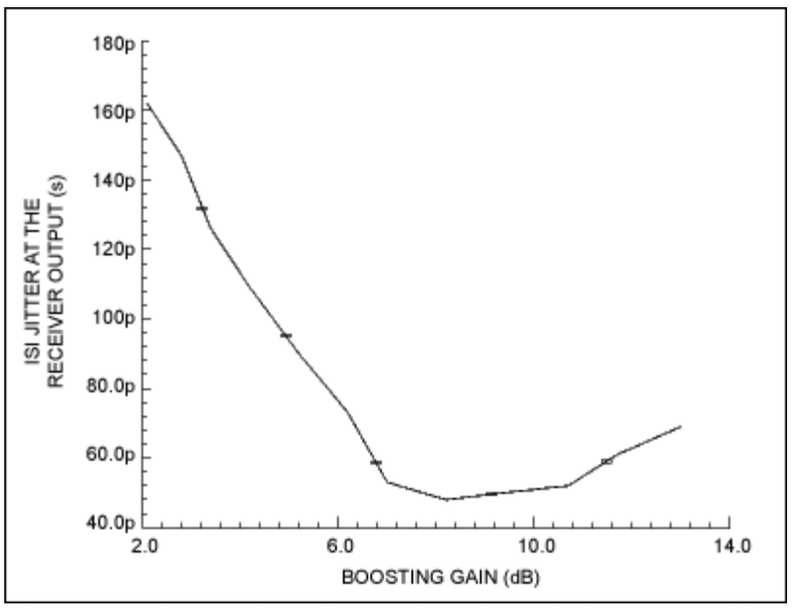

Figure 9. Peak-to-peak ISI jitter vs. boosting gain for a 10m cable.

Choosing the Optimal Preemphasis and Equalizer Setting

Perhaps you do not want to measure the cable loss with a spectrum analyzer. In that case, the easiest method for choosing an optimal preemphasis/equalizer setting is to look at the bit-error rate of the system at limit frequencies. Two real-world cases will be supplied here as examples.

In Table 2, we summarize the maximum pixel clock frequencies at which our SerDes pair, like the MAX9259/MAX9260 or the MAX9249/MAX9268, can operate with a 10m cable. Each column shows a different Rx equalizer boost gain, whereas each row corresponds to a

different Tx preemphasis value. The SerDes pair under testing can operate up to 124MHz when the transmission medium is equalized properly. It reaches 124MHz with a minimum total boost of 14.1dB (1.1dB preemphasis and 13dB Rx equalization). After the total boost goes above 18.2dB (14dB preemphasis and 4.2dB Rx equalization), ISI again starts to increase, which limits the operation frequency. Thus, it is wise to choose a total boost value between 14.1dB and 18.2dB. We generally recommend choosing the big portion of boost from the Rx part, because the Rx equalizer has a constant low-frequency gain, whereas Tx attenuates the low-frequency to implement preemphasis. Attenuating the low-frequency means lower signal levels over the link, which makes the life more difficult for the receiver. So 3.3dB preemphasis and 13dB Rx boost would be a good selection. The same procedure can be applied for a 15m cable as well. Its maximum frequencies for different boost levels are summarized in Table 3. Minimum and maximum boost levels are 19.7dB (8dB preemphasis and 11.7dB Rx equalization) and 23.4dB (14dB preemphasis and 9.4dB Rx equalization), respectively, so 8dB preemphasis and 13dB Rx boost is the optimum choice.

Table 2. Example 10m Automotive STP Cable and Connectors

Rx / Tx	0000 2.1dB	0001 2.8dB	0010 3.4dB	0011 4.2dB	0100 5.2dB	0101 6.2dB	0110 7dB	0111 8.2dB	1000 9.4dB	1001 10.7dB	1010 11.7dB	1011 13dB
OFF	70	72	76	80	85	90	98	105	113	119	122	123
1.1dB	78	80	83	88	93	98	105	111	117	121	123	124
2.2dB	85	87	90	94	99	104	110	116	120	123	124	124
3.3dB	92	95	97	102	106	111	116	119	122	124	124	124
4.4dB	100	103	105	108	113	117	120	122	124	124	124	124
6.0dB	110	112	115	117	120	122	123	124	124	124	124	115
8.0dB	119	120	121	122	123	124	124	124	124	114	109	104
10.5dB	123	124	124	124	124	124	119	113	108	103	97	92
14.0dB	124	124	124	124	114	110	104	100	95	91	86	78

Table 3. Example 15m Automotive STP Cable and Connectors

Rx / Tx	0000 2.1dB	0001 2.8dB	0010 3.4dB	0011 4.2dB	0100 5.2dB	0101 6.2dB	0110 7dB	0111 8.2dB	1000 9.4dB	1001 10.7dB	1010 11.7dB	1011 13dB
OFF	47	48	50	52	54	57	61	67	76	84	94	104
1.1dB	53	54	55	57	60	63	68	75	82	90	101	110
2.2dB	58	59	61	63	66	70	76	81	89	97	106	114
3.3dB	64	65	67	69	73	77	83	88	95	104	112	118
4.4dB	71	73	74	77	81	84	90	96	104	110	117	120
6.0dB	81	82	84	87	91	95	101	107	112	118	121	123
8.0dB	93	94	96	99	103	108	112	116	120	122	124	124
10.5dB	108	110	112	113	117	119	121	122	124	124	124	124
14.0dB	118	118	119	121	122	123	124	124	124	110	101	94

Color Code

≥ 104MHz (3.125Gbps)	84MHz to 103MHz (2.5Gbps to 3.125Gbps)
66MHz to 83MHz (2.0Gbps to 2.5Gbps)	< 66MHz (2.0Gbps)

Link Activity Detector

GMSL deserializers have a signal-detector circuit, which disables the receiver when there is no signal over the link. When the signal levels are very low due to long cables or high preemphasis levels, deserializers may not detect the activity over the link. Thus, it is highly recommended to disable the activity detector, while searching the optimum preemphasis and equalizer setting for long cables (> 10m). The detector can be disabled by writing "0x80" to the byte 11 of the deserializer. It can be enabled again by writing "0x20" to the same byte after the optimum values are chosen. According to our lab measurements, the activity detector works up to 8dB preemphasis for a 15m cable at the maximum PCLK frequency 104.16MHz. There is also a low threshold option for the activity detector. It can be programmed by writing "0x00" to the byte 11. According to lab

measurements, the activity detector works up to 14dB preemphasis for a 15m cable when low threshold is selected. If the cable is longer than 15m and preemphasis is 14dB, it is recommended to disable the activity detector. Cables used in these measurements are standard automotive STP cables.

Related Parts		
MAX9259	Gigabit Multimedia Serial Link with Spread Spectrum and Full-Duplex Control Channel	Free Samples
MAX9260	Gigabit Multimedia Serial Link with Spread Spectrum and Full-Duplex Control Channel	Free Samples
MAX9263	HDCP Gigabit Multimedia Serial Link Serializer/Deserializer	Free Samples
MAX9264	HDCP Gigabit Multimedia Serial Link Serializer/Deserializer	Free Samples
MAX9265	HDCP Gigabit Multimedia Serial Link Serializer with LVDS System Interface	Free Samples
MAX9266	HDCP Gigabit Multimedia Serial Link Deserializer with LVDS System Interface	Free Samples

Next Steps	
EE-Mail	Subscribe to EE-Mail and receive automatic notice of new documents in your areas of interest.
Download	Download, PDF Format (486.9kB)
Share	Other Channels E-Mail this page to an associate or friend.

More Information
For Technical Support: http://www.maxim-ic.com/support
For Samples: http://www.maxim-ic.com/samples
Other Questions and Comments: http://www.maxim-ic.com/contact

Application Note 5045: http://www.maxim-ic.com/an5045
TUTORIAL 5045, AN5045, AN 5045, APP5045, Appnote5045, Appnote 5045
Copyright © by Maxim Integrated Products
Additional Legal Notices: http://www.maxim-ic.com/legal